Benchmark #1: Cut square on Northeast corner of concrete base of traffic control box at Southeast corner of 63rd Street & Wentworth Ave., Elevation 603.07.

Existing Structure: S.N. 016-1149, originally built as F.A.I. Route 94, Section 066-1920-C.F., 63rd Street Grade Separation over South Route (present Dan Ryan) Expressway, project BUI-94-3(55)56 in 1960. The existing five span structure consists of simple span 33'' deep PPC deck beams. A 5'' thick reinforced concrete deck was added in 1994. The substructure consists of closed abutments and reinforced concrete piers consisting of a cap beam and multiple rectangular columns on a crashwall. The back to back abutment measures 302'-5 5/8'' and the out to out of deck is 83'-0''. The existing superstructure is to be removed and replaced. The substructure will remain, except that the piers will be rebuilt above the existing crashwalls and the abutment seats will be rebuilt. One lane of traffic in each direction shall be maintained at all times using staged construction.

No Salvage.

Notes:
1. Min. vertical clearance points occur at north fascia beam typ.
2. ℄ 63rd Street is approximately at CTA Sta. 249+50.

LEGEND

—E——E—	Existing Electric
—E——E—	Proposed Electric
—T——T—	Telephone Cable
—W—	Water Pipe

DESIGN STRESSES

FIELD UNITS (New Const.)

f'c = 3,500 psi
fy = 60,000 psi (reinforcement)
fy = 50,000 psi (M270 Grade 50)

FIELD UNITS (Existing Const.)

f'c = 3,500 psi
fy = 40,000 psi (reinforcement)

SEISMIC DATA

Seismic Performance Zone (SPZ) = 1
Design Spectral Acceleration at 1.0 sec. (S_{D1}) = 0.07g
Design Spectral Acceleration at 0.2 sec. (S_{DS}) = 0.11g
Soil Site Class = C

DESIGN SPECIFICATIONS (New Const.)

AASHTO LRFD Bridge Design Specifications
5th Edition with 2010 Interims

LOADING HL-93 (New Const.)

Allow 50#/sq. ft. for
future wearing surface

Sta. A = Sta. 20+55.35 @ ℄ 63rd Street
Sta. 3422+31.65 @ ℄ SB Local Lanes

Sta. B = Sta. 21+31.12 @ ℄ 63rd Street
Sta. 1422+37.79 @ ℄ SB Express Lanes

Sta. C = Sta. 22+13.83 @ ℄ 63rd Street
Sta. 2422+55.54 @ ℄ NB Express Lanes

Sta. D = Sta. 22+79.96 @ ℄ 63rd Street
Sta. 4422+54.06 @ ℄ NB Local Lanes

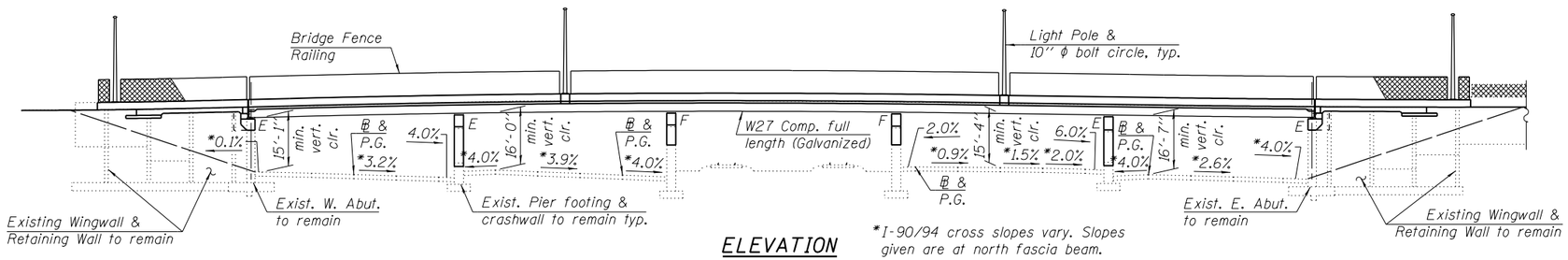

ELEVATION

*I-90/94 cross slopes vary. Slopes given are at north fascia beam.

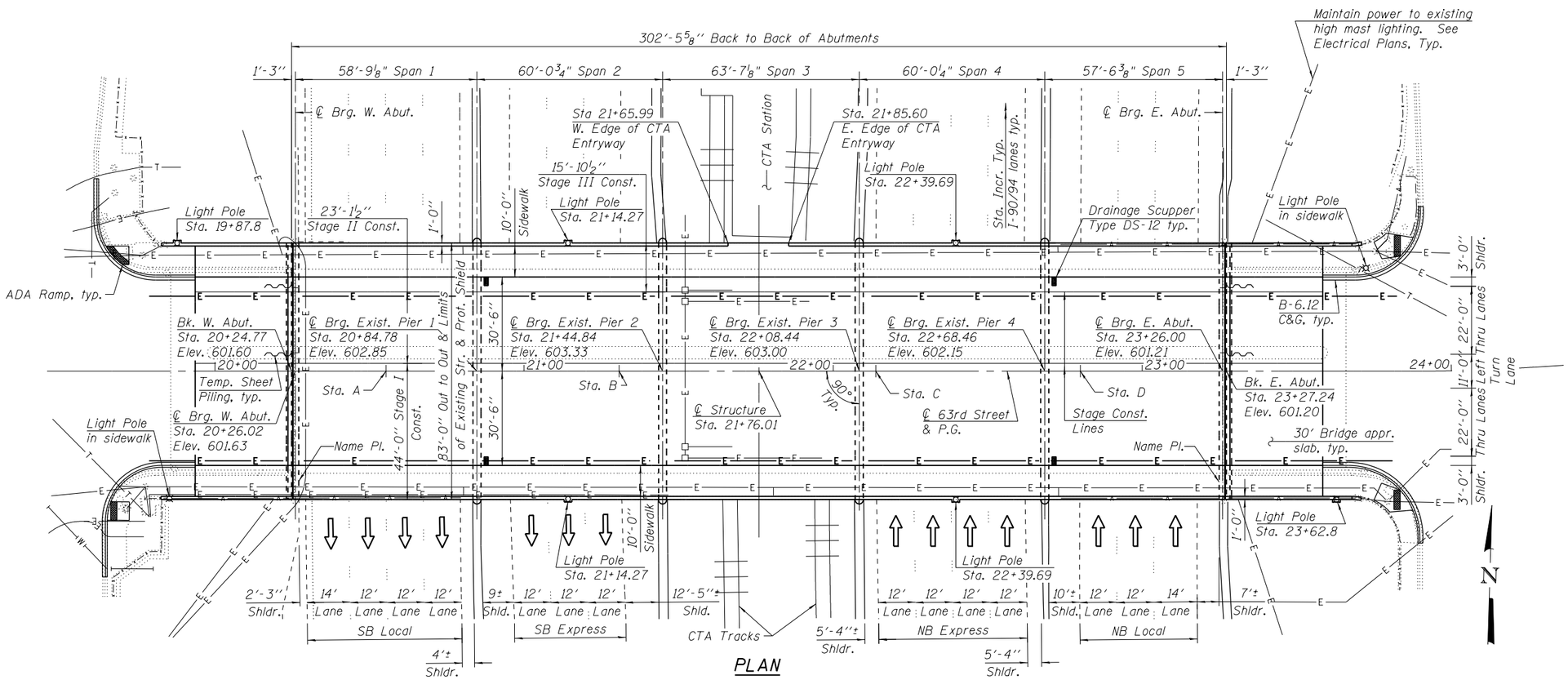

PLAN

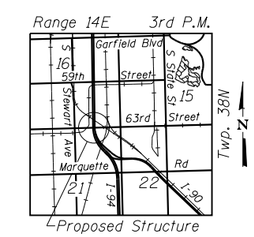

LOCATION SKETCH

STATE OF ILLINOIS
JOHN A. ZERFAS
081-004706
CHICAGO, IL
LICENSED STRUCTURAL ENGINEER
EXPIRES 11/30/2014

GENERAL PLAN & ELEVATION
63RD STREET OVER I-90/94
F.A.U. ROUTE 1519 - SEC. 1920-B
COOK COUNTY
STATION 21+76.01
STRUCTURE NO. 016-1149

H:\Jobs2011\20130221\CAD\Structural\dgn\016-1149_Final\00\D160J15-s01-gpe.dgn
5/20/2013 11:23:57 AM

GRAEF
8501 W. Higgins Road; Suite 280
Chicago, Illinois 60631; (773) 399-0112

USER NAME =	DESIGNED - J.Z.	REVISED -	
	CHECKED - J.A.Z.	REVISED -	
PLOT SCALE =	DRAWN - E.E.J.	REVISED -	
PLOT DATE =	DATE - 5/17/2013	REVISED -	

STATE OF ILLINOIS
DEPARTMENT OF TRANSPORTATION

GENERAL PLAN & ELEVATION
STRUCTURE NO. 016-1149
SHEET NO. 51 OF 50 SHEETS

F.A.I. RTE.	SECTION	COUNTY	TOTAL SHEETS	SHEET NO.
94	1920-B	COOK	137	60
		CONTRACT NO. 60J15		
		ILLINOIS FED. AID PROJECT		

TOTAL BILL OF MATERIAL

ITEM	UNIT	SUPER	SUB	TOTAL
Removal of Existing Superstructures	Each	1		1
Concrete Removal	Cu. Yd.		309	309
Protective Shield	Sq. Yd.	2,652		2,652
Structure Excavation	Cu. Yd.		217	217
Concrete Structures	Cu. Yd.		385.7	385.7
Concrete Superstructure	Cu. Yd.	1,144.2		1,144.2
Bridge Deck Grooving	Sq. Yd.	2,390		2,390
Protective Coat	Sq. Yd.	3,607		3,607
Furnishing & Erecting Structural Steel	L. Sum	1		1
Stud Shear Connectors	Each	16,830		16,830
Reinforcement Bars, Epoxy Coated	Pound	253,290	75,180	328,470
Bar Splicers	Each	2,596	314	2,910
Bridge Fence Railing	Foot	755		755
Temporary Bridge Complete	Each	1		1
Name Plates	Each	2		2
Preformed Joint Strip Seal	Foot	167		167
Elastomeric Bearing Assembly, Type I	Each		22	22
Elastomeric Bearing Assembly, Type II	Each		22	22
Anchor Bolts, 3/4''	Each		44	44
Anchor Bolts, 1''	Each		88	88
Concrete Sealer	Sq. Ft.		8,540	8,540
Epoxy Crack Injection	Foot		19	19
Temporary Fence (Special)	Foot	453		453
Granular Backfill for Structures	Cu. Yd.		92	92
Temporary Shoring	Each	4		4
Structural Repair of Concrete (Depth Equal to or Less Than 5 Inches)	Sq. Ft.		685	685
Drainage Scuppers, DS-12	Each	4		4
Drainage System	L. Sum	1		1
Temporary Sheet Piling	Sq. Ft.		662	662

BRIDGE GENERAL NOTES

1. Fasteners shall be ASTM A325 Type 1, mechanically galvanized bolts. Bolts $^{7}/_{8}$'' diameter, holes $^{15}/_{16}$'' diameter, unless otherwise noted.
2. Calculated weight of Structural Steel: AASHTO M270 Grade 36 = 36,630 lbs.
   AASHTO M270 Grade 50 = 462,190 lbs.
3. All new structural steel shall be galvanized. See the Special Provision "Hot Dip Galvanizing for Structural Steel".
4. No field welding is permitted except as specified in the contract documents.
5. Reinforcement bars designated (E) shall be epoxy coated.
6. Plan dimensions and details relative to existing plans are subject to nominal construction variations. The Contractor shall field verify existing dimensions and details affecting new construction and make necessary approved adjustments prior to construction or ordering of materials. Such variations shall not be cause for additional compensation for a change in scope of the work, however, the Contractor will be paid for the quantity actually furnished at the unit price bid for the work.
7. Bearing seat surfaces shall be constructed or adjusted to the designed elevations within a tolerance of $^{1}/_{8}$ in. (0.01 ft.). Adjustment shall be made either by grinding the surface or by shimming the bearings.
8. Concrete Sealer shall be applied to all exposed surfaces of the new concrete at both abutments and at all four piers.
9. Slipforming of the parapets is not allowed.
10. Protective Shield shall be provided at all spans, face-to-face of piers or abutments and out-to-out of existing superstructure.

STATION 21+76.01
RE-BUILT 201_ BY
STATE OF ILLINOIS
F.A.U. RTE. 1519 SEC. 1920-B
LOADING HL-93
STRUCTURE NO. 016-1149

NAME PLATE

See Std. 515001. Two required. Place new name plates next to existing name plates at each abutment.

INDEX OF SHEETS

S1 GENERAL PLAN & ELEVATION
S2 GENERAL NOTES & TOTAL BILL OF MATERIAL
S3 CONSTRUCTION STAGING I
S4 CONSTRUCTION STAGING II
S5 TEMPORARY CONCRETE BARRIER FOR STAGE CONSTRUCTION
S6 TEMPORARY SHEET PILING
S7 TOP OF DECK SLAB ELEVATIONS LAYOUT
S8 TOP OF DECK SLAB ELEVATIONS I
S9 TOP OF DECK SLAB ELEVATIONS II
S10 TOP OF DECK SLAB ELEVATIONS III
S11 TOP OF DECK SLAB ELEVATIONS IV
S12 TOP OF DECK SLAB ELEVATIONS V
S13 TOP OF WEST APPROACH SLAB ELEVATIONS
S14 TOP OF EAST APPROACH SLAB ELEVATIONS
S15 DECK PLAN I
S16 DECK PLAN II
S17 DECK SECTIONS
S18 DECK DETAILS I
S19 DECK DETAILS II
S20 BRIDGE APPROACH SLAB
S21 BRIDGE APPROACH SLAB DETAILS
S22 BRIDGE FENCE RAILING, PARAPET MOUNTED
S23 BRIDGE FENCE RAILING DETAILS
S24 PREFORMED JOINT STRIP SEAL
S25 DRAINAGE SCUPPER, DS-12
S26 FRAMING PLAN
S27 BEAM DETAILS
S28 FIELD SPLICE DETAILS
S29 EXPANSION BEARINGS DETAILS
S30 FIXED BEARINGS DETAILS
S31 ABUTMENT REMOVAL & REPAIRS
S32 WEST ABUTMENT
S33 EAST ABUTMENT
S34 ABUTMENT DETAILS
S35 WINGWALL REMOVAL & REPAIRS I
S36 WINGWALL REMOVAL & REPAIRS II
S37 WINGWALL DETAILS
S38 PIER 1 REMOVAL & REPAIR
S39 PIER 1 PLAN & ELEVATION
S40 PIER 2 REMOVAL & REPAIR
S41 PIER 2 PLAN & ELEVATION
S42 PIER 3 REMOVAL & REPAIR
S43 PIER 3 PLAN & ELEVATION
S44 PIER 4 REMOVAL & REPAIR
S45 PIER 4 PLAN & ELEVATION
S46 PIER DETAILS
S47 PIER BILLS OF MATERIAL
S48 BRIDGE DRAINAGE SYSTEM
S49 BAR SPLICER ASSEMBLY DETAILS
S50 CANTILEVER FORMING BRACKETS FOR SUPERSTRUCTURE

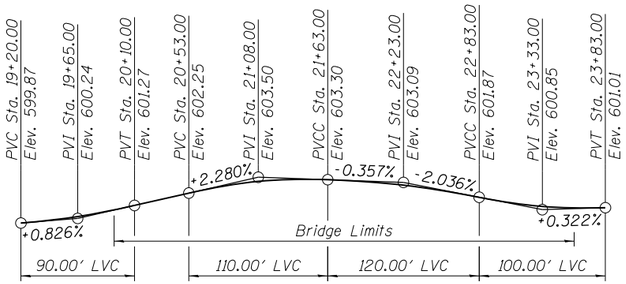

PROFILE GRADE, 63RD STREET

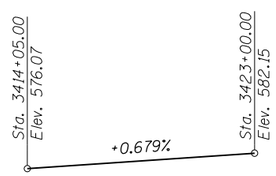

PROFILE GRADE I-90/94 SB LOCAL LANES

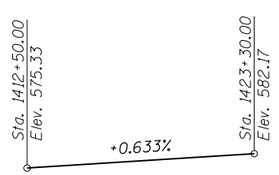

PROFILE GRADE I-90/94 SB EXPRESS LANES

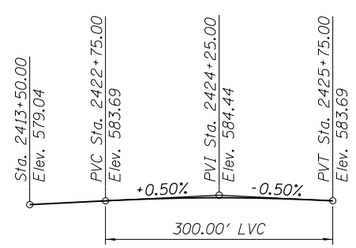

PROFILE GRADE I-90/94 NB EXPRESS LANES

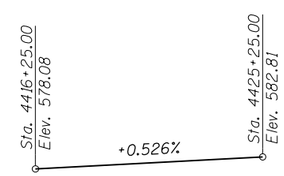

PROFILE GRADE I-90/94 NB LOCAL LANES

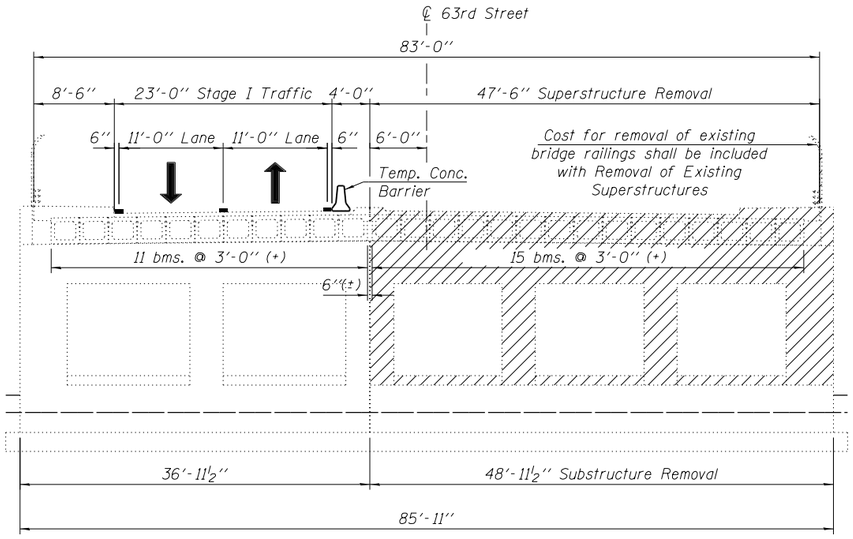

STAGE I REMOVAL

(Pier 1 shown, looking East)

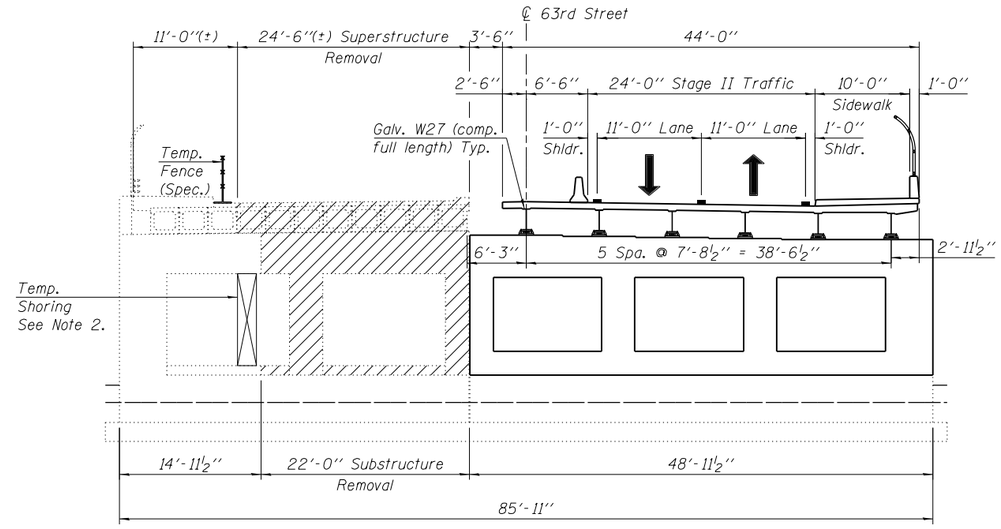

STAGE II REMOVAL

(Pier 1 shown, looking East)

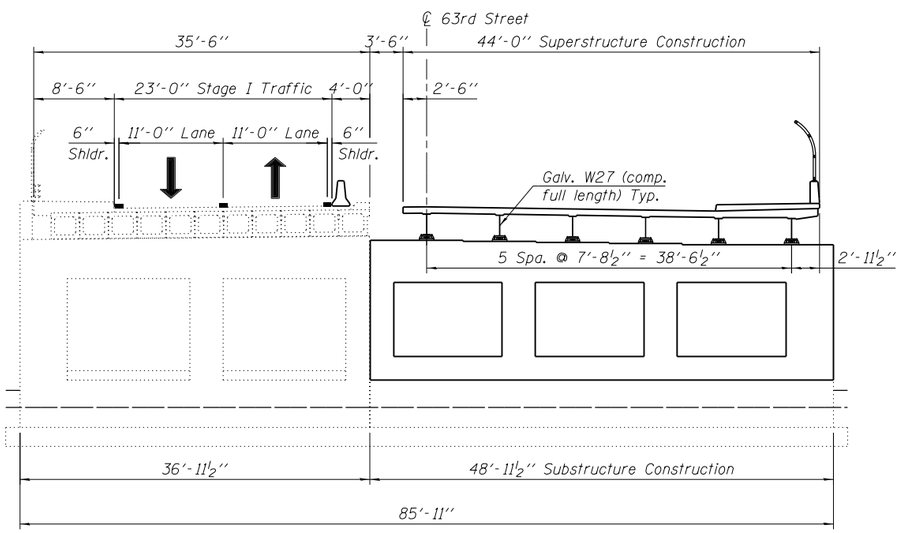

STAGE I CONSTRUCTION

(Pier 1 shown, looking East)

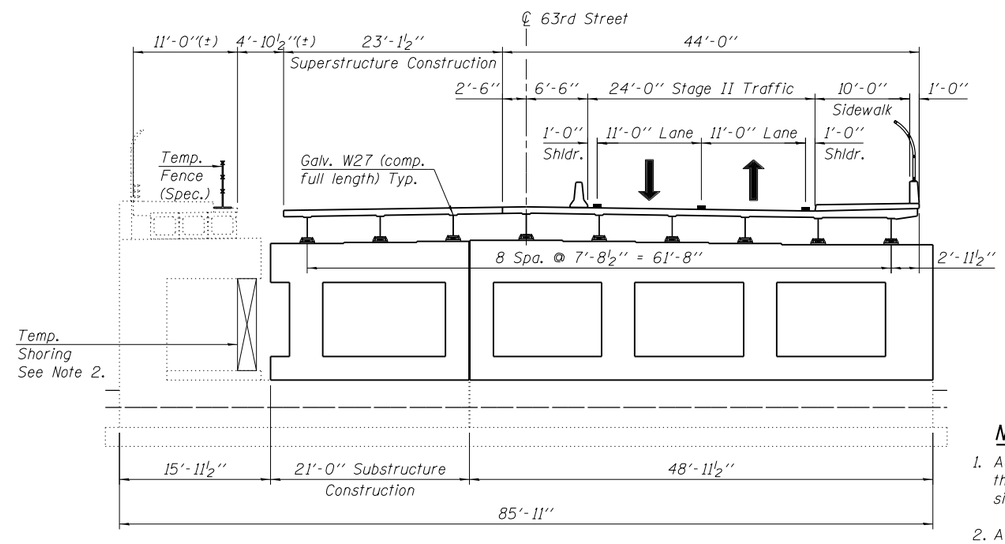

STAGE II CONSTRUCTION

(Pier 1 shown, looking East)

NOTES

1. Access to the CTA Red Line station shall be maintained throughout construction. During Stages I & II the North sidewalk shall remain open.
2. At each Pier, provide Temporary Shoring at the start of Stage II Removal. The Temporary Shoring shall be designed for the following unfactored loads:
   Dead Load=212 kips
   Live Load= 27 kips
3. The existing sidewalks may contain asbestos cement ducts. Ducts attached to the bridge fascias may also contain asbestos. The Contractor is responsible for removal and proper disposal of all existing ducts/conduit. This cost shall be included in Removal of Existing Superstructures (unless paid elsewhere).
4. Removal and disposal of the existing metal railings, fence and light poles shall be included in Removal of Existing Superstructures.

H:\Jobs2011\2011J022\CAD\Structural\dgn\016-1149_Final\00\D160J15-s03-staging1.dgn
5/20/2013 11:23:58 AM

GRAEF
8501 W. Higgins Road; Suite 280
Chicago, Illinois 60631; (773) 399-0112

USER NAME =	DESIGNED - J.Z.	REVISED -	
	CHECKED - J.A.Z.	REVISED -	
PLOT SCALE =	DRAWN - E.E.J.	REVISED -	
PLOT DATE =	DATE - 5/17/2013	REVISED -	

STATE OF ILLINOIS
DEPARTMENT OF TRANSPORTATION

CONSTRUCTION STAGING I
STRUCTURE NO. 016-1149

SHEET NO. 53 OF 50 SHEETS

F.A.I. RTE.	SECTION	COUNTY	TOTAL SHEETS	SHEET NO.
94	1920-B	COOK	137	62

CONTRACT NO. 60J15

ILLINOIS FED. AID PROJECT

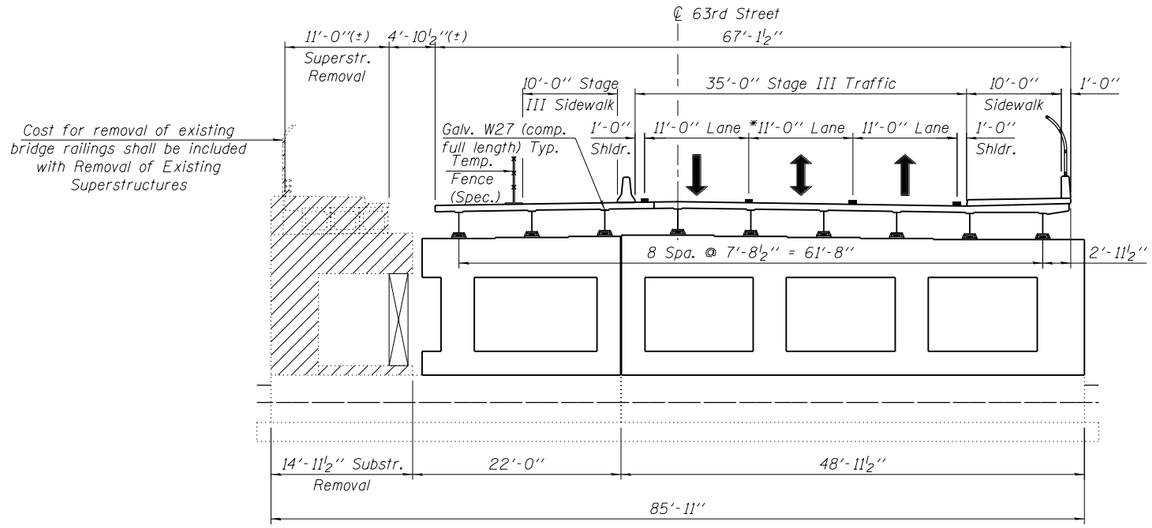

STAGE III REMOVAL

(Pier 1 shown, looking East)

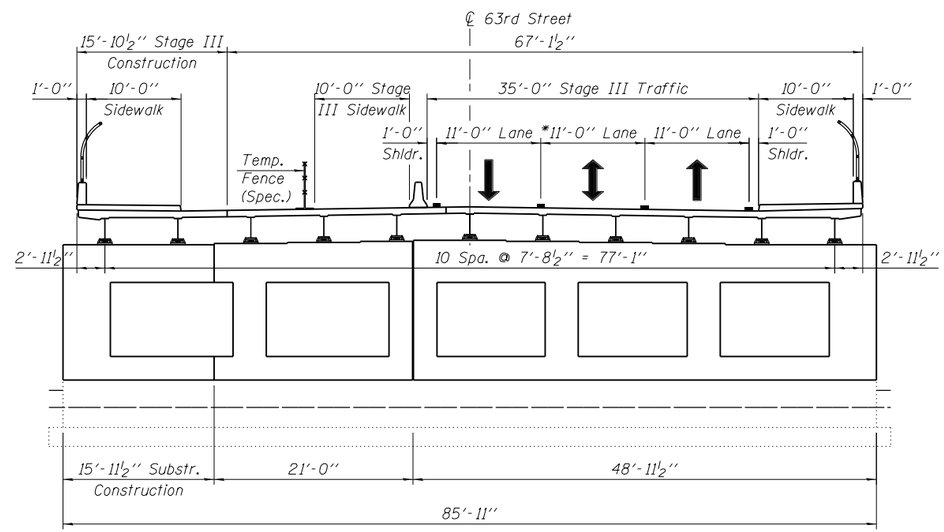

STAGE III CONSTRUCTION

(Pier 1 shown, looking East)

NOTES

1. The Contractor shall design and furnish one "Temporary Bridge Complete" for Stage III Removal and Construction. The bridge is required to provide access to the CTA Station from the Stage III sidewalk. The bridge shall meet the requirements of Section 513 of the Standard Specifications, and shall be suitable for pedestrian traffic and shall meet all A.D.A. requirements. The clear span of the bridge shall be 15'-10½" (the Stage III construction width) and the clear width shall be 8 feet. The design live load shall be 85 psf.

   The CTA Station has two sets of double doors. Access to at least one pair of doors must be maintained throughout Stage III. The Contractor may choose to design a temporary bridge that could be moved with a crane to allow removal of existing deck beams, placement of new steel beams, placement of deck concrete, and placement of the concrete sidewalk. The new sidewalk can be placed using two separate concrete pours (one transverse construction joint in the sidewalk is acceptable). For existing beam removal, new beam placement and concrete deck placement, Station access may be closed between midnight and 5 AM, Monday thru Thursday, only. Access to the Station must be maintained at all other times. The Contractor must coordinate the station closures with the CTA. Regardless of the staging method selected by the Contractor, payment will be made for only one Temporary Bridge Complete.

2. *Center lane will be for left turns in opposite directions at each end of bridge.

3. The existing sidewalks may contain asbestos cement ducts. Ducts attached to the bridge fascias may also contain asbestos. The Contractor is responsible for removal and proper disposal of all existing ducts/conduit. This cost shall be included in Removal of Existing Superstructures (unless paid elsewhere).

4. Removal and disposal of the existing metal railings, fence and light poles shall be included in Removal of Existing Superstructures.

GRAEF
8501 W. Higgins Road; Suite 280
Chicago, Illinois 60631; (773) 399-0112

USER NAME =	DESIGNED - J.Z.	REVISED -	
	CHECKED - J.A.Z.	REVISED -	
PLOT SCALE =	DRAWN - E.E.J.	REVISED -	
PLOT DATE =	DATE - 5/17/2013	REVISED -	

STATE OF ILLINOIS
DEPARTMENT OF TRANSPORTATION

CONSTRUCTION STAGING II
STRUCTURE NO. 016-1149

SHEET NO. S4 OF 50 SHEETS

F.A.I. RTE.	SECTION	COUNTY	TOTAL SHEETS	SHEET NO.
94	1920-B	COOK	137	63
		CONTRACT NO. 60J15		
	ILLINOIS	FED. AID PROJECT		

H:\Jobs2011\2011J022\CAD\Structural\dgn\016-1149_Final\00\D160J15-s04-staging2.dgn
5/20/2013 11:23:58 AM

When "A" is 3'-6" or less, the temporary concrete barrier shall be anchored to the new slab according to Detail I or Detail II. No anchorage is required when "A" is greater than 3'-6".

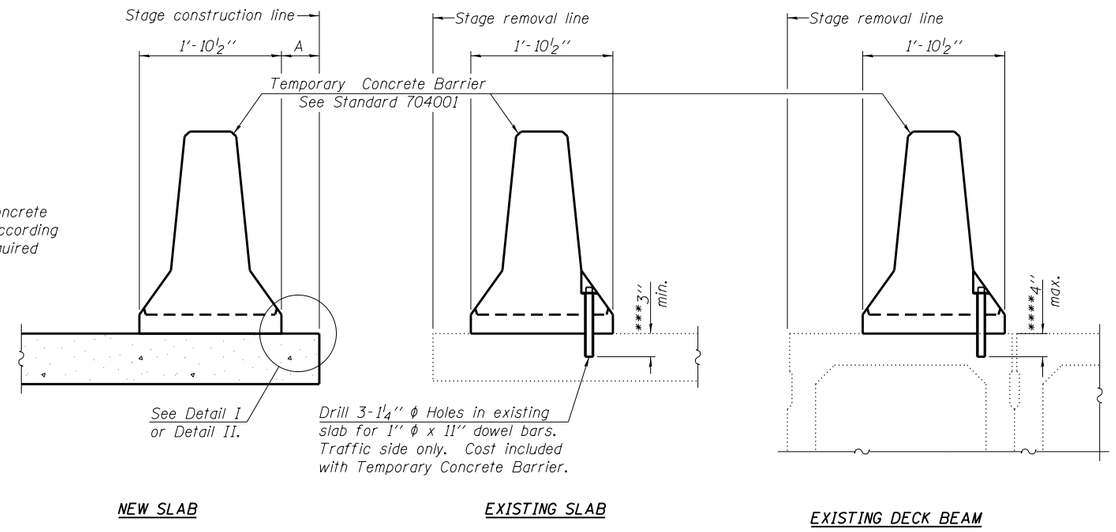

SECTIONS THRU SLAB OR DECK BEAM

NOTES

Detail I - With Bar Splicer or Couplers:
Connect one (1) 1'' x 7'' x "W" steel PL to the top layer of couplers with 2-⅝'' ϕ bolts screwed to coupler at approximate ℄ of each barrier panel.

Detail II - With Extended Reinforcement Bars:
Connect one (1) 1'' x 7'' x "W" steel PL to the concrete slab or concrete wearing surface with 2-⅝'' ϕ Expansion Anchors or cast in place inserts spaced between the top layer of reinforcement at approximate ℄ of each barrier panel.

Cost of anchorage is included with Temporary Concrete Barrier.

The 1'' x 7'' x "W" plate shall not be removed until stage II construction forms and all reinforcement bars are in place and the concrete is ready to be placed.

*** Dimension shown is minimum required embedment into concrete. If hot-mix asphalt wearing surface is present, minimum embedment shall be in addition to wearing surface depth.

**** If existing deck beam is to remain in place after stage construction, embedment shall only be into wearing surface and not into existing deck beam concrete.

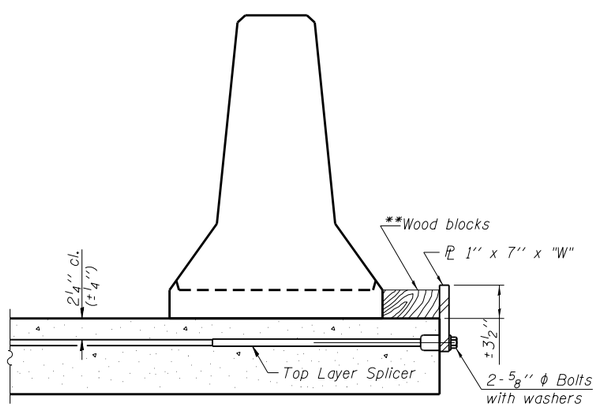

DETAIL I

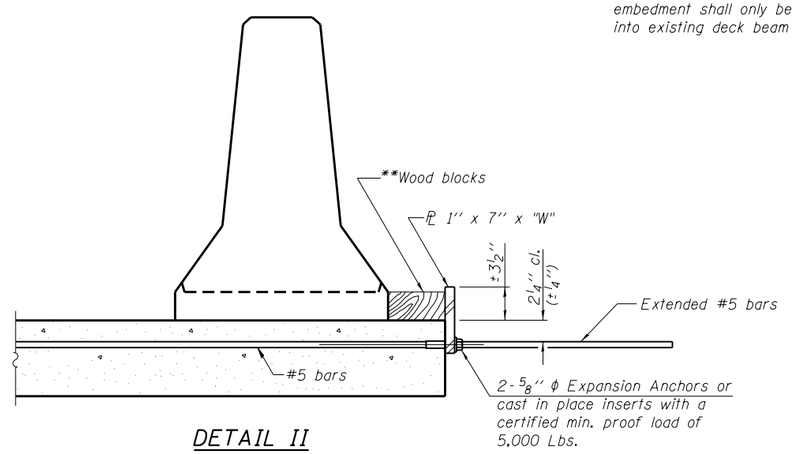

DETAIL II

** Wood blocks may be omitted when required to provide minimum stage traffic lane width. When the wood blocks are omitted, the concrete barrier shall be in direct contact with the steel retainer plate.

"W" = Top bars spacing + 4''

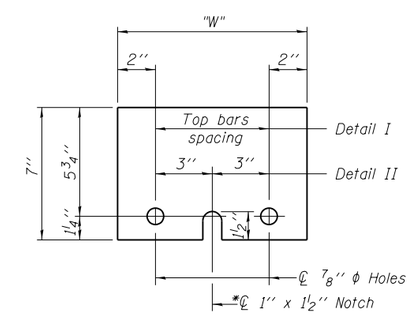

STEEL RETAINER PL 1'' x 7'' x "W"

* Required only with Detail II

R-27

7-1-10

GRAEF
8501 W. Higgins Road; Suite 280
Chicago, Illinois 60631; (773) 399-0112

USER NAME =	DESIGNED - J.Z.	REVISED -	
	CHECKED - J.A.Z.	REVISED -	
PLOT SCALE =	DRAWN - E.E.J.	REVISED -	
PLOT DATE =	DATE - 5/17/2013	REVISED -	

STATE OF ILLINOIS
DEPARTMENT OF TRANSPORTATION

TEMPORARY CONCRETE BARRIER FOR STAGE CONSTRUCTION
STRUCTURE NO. 016-1149

SHEET NO. 55 OF 50 SHEETS

F.A.I. RTE.	SECTION	COUNTY	TOTAL SHEETS	SHEET NO.
94	1920-B	COOK	137	64
		CONTRACT NO. 60J15		
	ILLINOIS	FED. AID PROJECT		

H:\Jobs20II\20II3022\CAD\Structural\dgn\016-1149_Final\00\D160J15-s05-temp-barrier.dgn
5/20/2013 11:23:59 AM

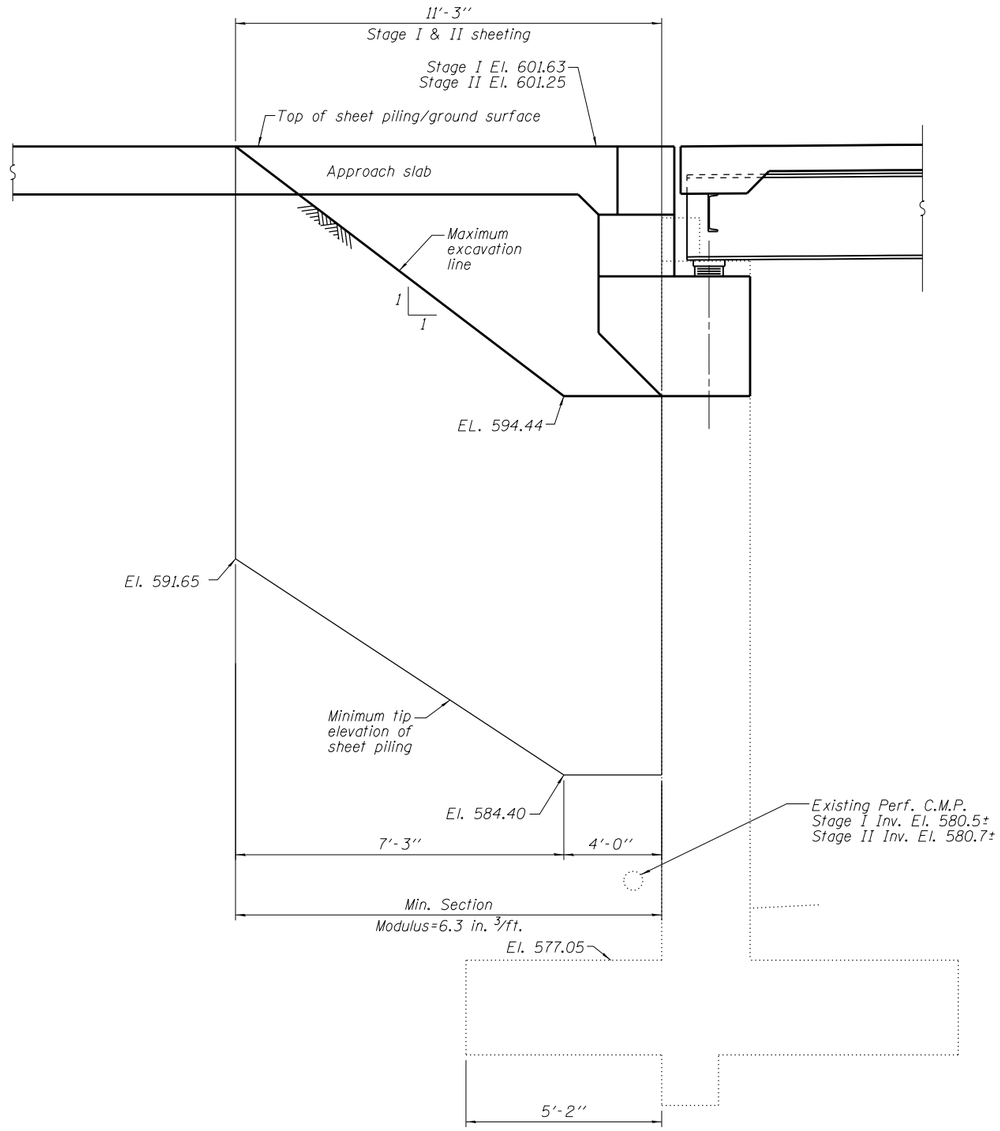

ELEVATION VIEW OF TEMPORARY SHEET PILING
LOOKING NORTH AT WEST ABUTMENT

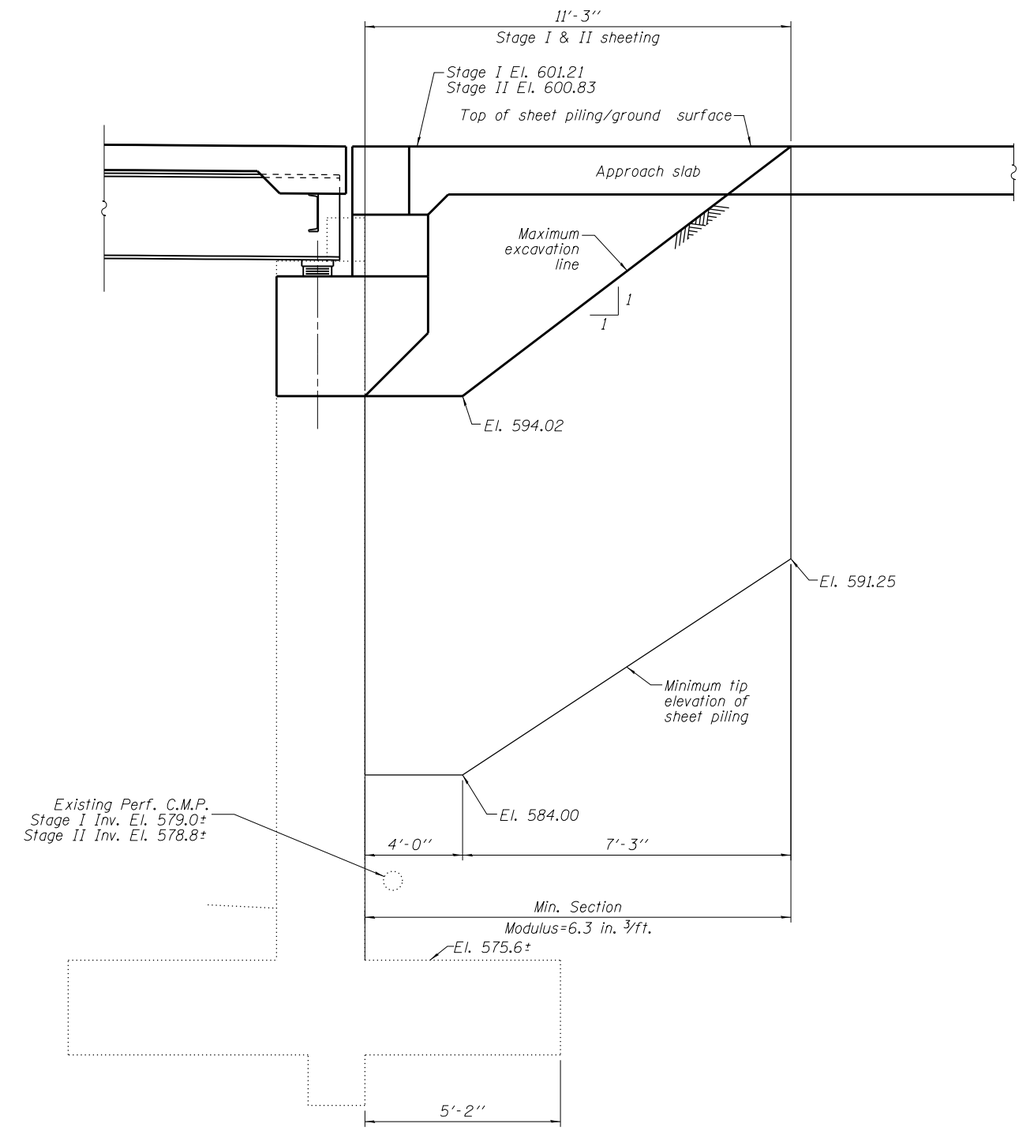

ELEVATION VIEW OF TEMPORARY SHEET PILING
LOOKING NORTH AT EAST ABUTMENT

NOTES

1. If the Contractor chooses to alter the temporary cantilevered sheet piling design requirements shown on the plans, a design submittal including plan details and calculations will be required for review and acceptance by the Engineer.

2. The temporary sheet piling shall be installed prior to excavation in Stage I and Stage II. Remove temporary sheet piling after backfilling in Stage II and Stage III.

BILL OF MATERIAL

ITEM	UNIT	QUANTITY
Temporary Sheet Piling	Sq. Ft.	662

H:\Jobs2011\2011\3022\CAD\Structural\dgn\016-1149_Final\00\D160J15-s06-temp-sht-piling.dgn
5/20/2013 11:23:59 AM

GRAEF
8501 W. Higgins Road; Suite 280
Chicago, Illinois 60631; (773) 399-0112

USER NAME =	DESIGNED - J.Z.	REVISED -	
	CHECKED - J.A.Z.	REVISED -	
PLOT SCALE =	DRAWN - E.E.J.	REVISED -	
PLOT DATE =	DATE - 5/17/2013	REVISED -	

STATE OF ILLINOIS
DEPARTMENT OF TRANSPORTATION

TEMPORARY SHEET PILING
STRUCTURE NO. 016-1149

SHEET NO. S6 OF 50 SHEETS

F.A.I. RTE.	SECTION	COUNTY	TOTAL SHEETS	SHEET NO.
94	1920-B	COOK	137	65

CONTRACT NO. 60J15

ILLINOIS FED. AID PROJECT

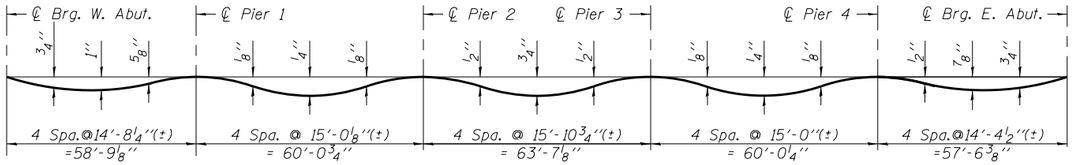

DEAD LOAD DEFLECTION DIAGRAM

(Includes weight of concrete only.)

Note: The above deflections are not to be used in the field if the engineer is working from the grade elevations adjusted for dead load deflections as shown on Sheets S8 thru S12.

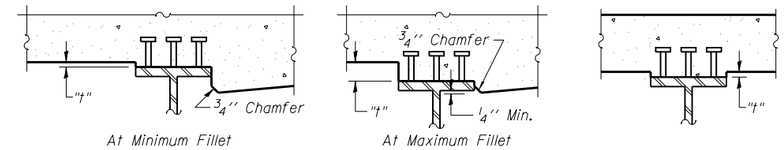

EXTERIOR BEAMS **INTERIOR BEAMS**

To determine "t": After all structural steel has been erected, elevations of the top flanges of the beams shall be taken at intervals shown below. These elevations subtracted from the "Theoretical Grade Elevations Adjusted for Dead Load Deflection" shown on Sheets S8 thru S12, minus slab thickness, equals the fillet heights "t" above top flange of beams.

FILLET HEIGHTS

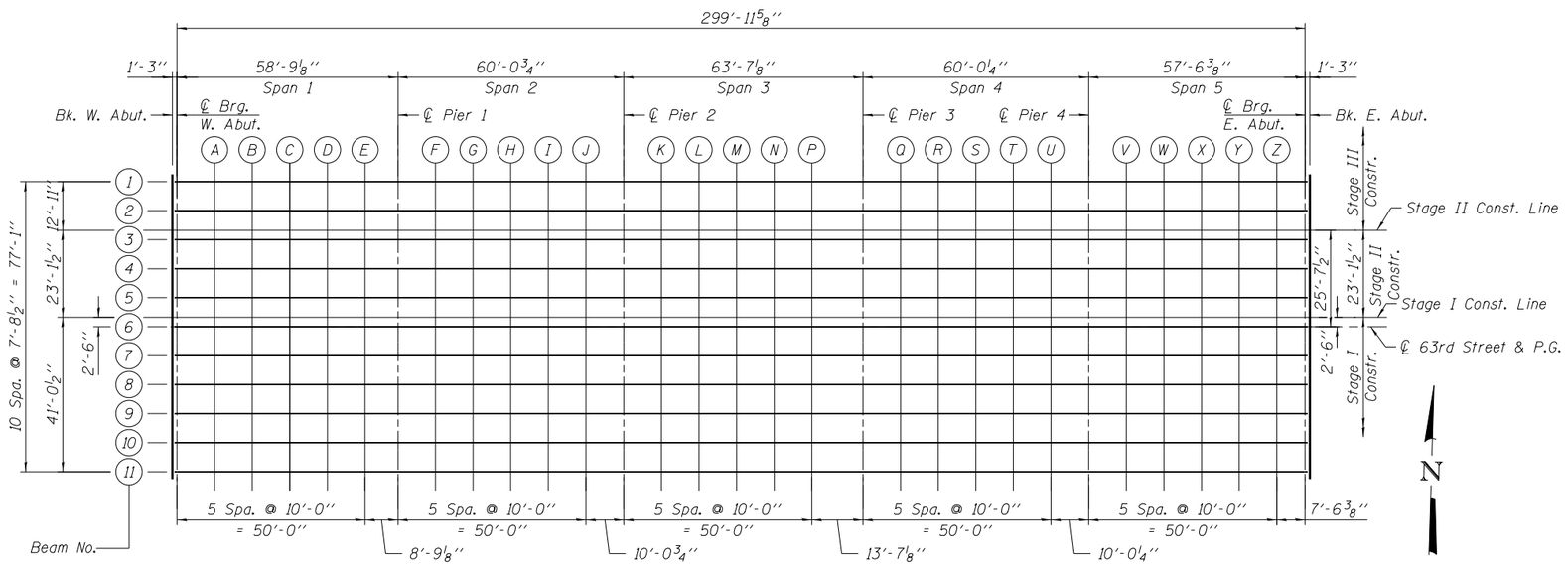

PLAN

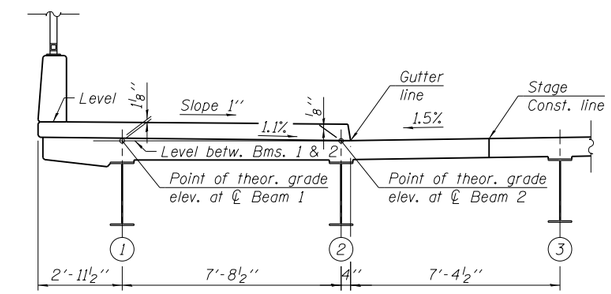

SECTION THRU NORTH SIDEWALK

(Looking East)

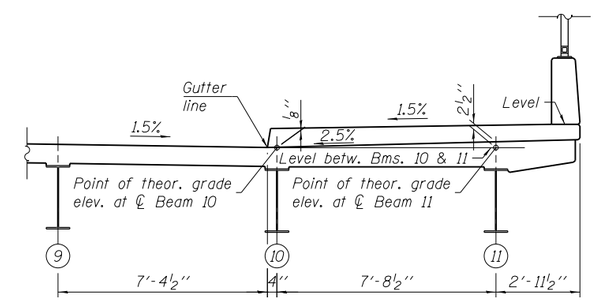

SECTION THRU SOUTH SIDEWALK

(Looking East)

H:\Jobs20\20I3022\CAD\Structural\dgn\016-1149_Final\00\D160J15-s07-tod-layout.dgn
5/20/2013 11:24:00 AM

GRāEF
8501 W. Higgins Road; Suite 280
Chicago, Illinois 60631; (773) 399-0112

USER NAME =	DESIGNED - J.Z.	REVISED -	
	CHECKED - J.A.Z.	REVISED -	
PLOT SCALE =	DRAWN - E.E.J.	REVISED -	
PLOT DATE =	DATE - 5/17/2013	REVISED -	

STATE OF ILLINOIS
DEPARTMENT OF TRANSPORTATION

TOP OF DECK SLAB ELEVATIONS LAYOUT
STRUCTURE NO. 016-1149

SHEET NO. S7 OF 50 SHEETS

F.A.I. RTE.	SECTION	COUNTY	TOTAL SHEETS	SHEET NO.
94	1920-B	COOK	137	66
		CONTRACT NO. 60J15		
		ILLINOIS FED. AID PROJECT		

BEAM 1

Location	Station	Offset	Theoretical Grade Elevations	Theoretical Grade Elevations Adjusted for DL Deflection
BK. W. ABUT.	20+24.77	-38.54	601.14	601.14
CL. Brg. W. Abut.	20+26.02	-38.54	601.17	601.17
A	20+36.02	-38.54	601.40	601.44
B	20+46.02	-38.54	601.62	601.70
C	20+56.02	-38.54	601.85	601.93
D	20+66.02	-38.54	602.06	602.12
E	20+76.02	-38.54	602.24	602.27
CL. Brg. Pier 1	20+84.78	-38.54	602.39	602.39
F	20+94.78	-38.54	602.53	602.53
G	21+04.78	-38.54	602.64	602.65
H	21+14.78	-38.54	602.73	602.75
I	21+24.78	-38.54	602.80	602.82
J	21+34.78	-38.54	602.85	602.85
CL. Brg. Pier 2	21+44.84	-38.54	602.87	602.87
K	21+54.84	-38.54	602.86	602.88
L	21+64.84	-38.54	602.83	602.88
M	21+74.84	-38.54	602.79	602.85
N	21+84.84	-38.54	602.73	602.78
P	21+94.84	-38.54	602.66	602.69
CL. Brg. Pier 3	22+08.44	-38.54	602.53	602.53
Q	22+18.44	-38.54	602.43	602.43
R	22+28.44	-38.54	602.31	602.32
S	22+38.44	-38.54	602.17	602.19
T	22+48.44	-38.54	602.03	602.04
U	22+58.44	-38.54	601.86	601.87
CL. Brg. Pier 4	22+68.46	-38.54	601.69	601.69
V	22+78.46	-38.54	601.50	601.52
W	22+88.46	-38.54	601.30	601.35
X	22+98.46	-38.54	601.12	601.19
Y	23+08.46	-38.54	600.96	601.03
Z	23+18.46	-38.54	600.83	600.87
CL. Brg. E. Abut.	23+26.00	-38.54	600.75	600.75
BK. E. ABUT.	23+27.24	-38.54	600.74	600.74

BEAM 2

Location	Station	Offset	Theoretical Grade Elevations	Theoretical Grade Elevations Adjusted for DL Deflection
BK. W. ABUT.	20+24.77	-30.83	601.14	601.14
CL. Brg. W. Abut.	20+26.02	-30.83	601.17	601.17
A	20+36.02	-30.83	601.40	601.44
B	20+46.02	-30.83	601.62	601.70
C	20+56.02	-30.83	601.85	601.93
D	20+66.02	-30.83	602.06	602.12
E	20+76.02	-30.83	602.24	602.27
CL. Brg. Pier 1	20+84.78	-30.83	602.39	602.39
F	20+94.78	-30.83	602.53	602.53
G	21+04.78	-30.83	602.64	602.65
H	21+14.78	-30.83	602.73	602.75
I	21+24.78	-30.83	602.80	602.82
J	21+34.78	-30.83	602.85	602.85
CL. Brg. Pier 2	21+44.84	-30.83	602.87	602.87
K	21+54.84	-30.83	602.86	602.88
L	21+64.84	-30.83	602.83	602.88
M	21+74.84	-30.83	602.79	602.85
N	21+84.84	-30.83	602.73	602.78
P	21+94.84	-30.83	602.66	602.69
CL. Brg. Pier 3	22+08.44	-30.83	602.53	602.53
Q	22+18.44	-30.83	602.43	602.43
R	22+28.44	-30.83	602.31	602.32
S	22+38.44	-30.83	602.17	602.19
T	22+48.44	-30.83	602.03	602.04
U	22+58.44	-30.83	601.86	601.87
CL. Brg. Pier 4	22+68.46	-30.83	601.69	601.69
V	22+78.46	-30.83	601.50	601.52
W	22+88.46	-30.83	601.30	601.35
X	22+98.46	-30.83	601.12	601.19
Y	23+08.46	-30.83	600.96	601.03
Z	23+18.46	-30.83	600.83	600.87
CL. Brg. E. Abut.	23+26.00	-30.83	600.75	600.75
BK. E. ABUT.	23+27.24	-30.83	600.74	600.74

STAGE II CONST. LINE

Location	Station	Offset	Theoretical Grade Elevations	Theoretical Grade Elevations Adjusted for DL Deflection
BK. W. ABUT.	20+24.77	-25.63	601.22	601.22
CL. Brg. W. Abut.	20+26.02	-25.63	601.25	601.25
A	20+36.02	-25.63	601.47	601.52
B	20+46.02	-25.63	601.70	601.78
C	20+56.02	-25.63	601.93	602.01
D	20+66.02	-25.63	602.14	602.20
E	20+76.02	-25.63	602.32	602.35
CL. Brg. Pier 1	20+84.78	-25.63	602.47	602.47
F	20+94.78	-25.63	602.61	602.60
G	21+04.78	-25.63	602.72	602.73
H	21+14.78	-25.63	602.81	602.83
I	21+24.78	-25.63	602.88	602.90
J	21+34.78	-25.63	602.92	602.93
CL. Brg. Pier 2	21+44.84	-25.63	602.94	602.94
K	21+54.84	-25.63	602.94	602.96
L	21+64.84	-25.63	602.91	602.96
M	21+74.84	-25.63	602.87	602.93
N	21+84.84	-25.63	602.81	602.86
P	21+94.84	-25.63	602.74	602.77
CL. Brg. Pier 3	22+08.44	-25.63	602.61	602.61
Q	22+18.44	-25.63	602.51	602.51
R	22+28.44	-25.63	602.39	602.40
S	22+38.44	-25.63	602.25	602.27
T	22+48.44	-25.63	602.10	602.12
U	22+58.44	-25.63	601.94	601.94
CL. Brg. Pier 4	22+68.46	-25.63	601.77	601.77
V	22+78.46	-25.63	601.57	601.60
W	22+88.46	-25.63	601.38	601.43
X	22+98.46	-25.63	601.20	601.27
Y	23+08.46	-25.63	601.04	601.11
Z	23+18.46	-25.63	600.91	600.95
CL. Brg. E. Abut.	23+26.00	-25.63	600.83	600.83
BK. E. ABUT.	23+27.24	-25.63	600.81	600.81

BEAM 3

Location	Station	Offset	Theoretical Grade Elevations	Theoretical Grade Elevations Adjusted for DL Deflection
BK. W. ABUT.	20+24.77	-23.13	601.26	601.26
CL. Brg. W. Abut.	20+26.02	-23.13	601.28	601.28
A	20+36.02	-23.13	601.51	601.56
B	20+46.02	-23.13	601.74	601.82
C	20+56.02	-23.13	601.97	602.05
D	20+66.02	-23.13	602.18	602.23
E	20+76.02	-23.13	602.36	602.38
CL. Brg. Pier 1	20+84.78	-23.13	602.50	602.50
F	20+94.78	-23.13	602.64	602.64
G	21+04.78	-23.13	602.76	602.77
H	21+14.78	-23.13	602.85	602.87
I	21+24.78	-23.13	602.92	602.93
J	21+34.78	-23.13	602.96	602.97
CL. Brg. Pier 2	21+44.84	-23.13	602.98	602.98
K	21+54.84	-23.13	602.98	603.00
L	21+64.84	-23.13	602.95	602.99
M	21+74.84	-23.13	602.91	602.96
N	21+84.84	-23.13	602.85	602.90
P	21+94.84	-23.13	602.77	602.80
CL. Brg. Pier 3	22+08.44	-23.13	602.65	602.65
Q	22+18.44	-23.13	602.54	602.55
R	22+28.44	-23.13	602.42	602.44
S	22+38.44	-23.13	602.29	602.31
T	22+48.44	-23.13	602.14	602.16
U	22+58.44	-23.13	601.98	601.98
CL. Brg. Pier 4	22+68.46	-23.13	601.80	601.80
V	22+78.46	-23.13	601.61	601.64
W	22+88.46	-23.13	601.41	601.47
X	22+98.46	-23.13	601.23	601.31
Y	23+08.46	-23.13	601.08	601.15
Z	23+18.46	-23.13	600.95	600.98
CL. Brg. E. Abut.	23+26.00	-23.13	600.86	600.86
BK. E. ABUT.	23+27.24	-23.13	600.85	600.85

BEAM 4

Location	Station	Offset	Theoretical Grade Elevations	Theoretical Grade Elevations Adjusted for DL Deflection
BK. W. ABUT.	20+24.77	-15.42	601.37	601.37
CL. Brg. W. Abut.	20+26.02	-15.42	601.40	601.40
A	20+36.02	-15.42	601.63	601.68
B	20+46.02	-15.42	601.86	601.93
C	20+56.02	-15.42	602.08	602.16
D	20+66.02	-15.42	602.29	602.35
E	20+76.02	-15.42	602.48	602.50
CL. Brg. Pier 1	20+84.78	-15.42	602.62	602.62
F	20+94.78	-15.42	602.76	602.76
G	21+04.78	-15.42	602.87	602.89
H	21+14.78	-15.42	602.97	602.98
I	21+24.78	-15.42	603.03	603.05
J	21+34.78	-15.42	603.08	603.08
CL. Brg. Pier 2	21+44.84	-15.42	603.10	603.10
K	21+54.84	-15.42	603.09	603.11
L	21+64.84	-15.42	603.07	603.11
M	21+74.84	-15.42	603.02	603.08
N	21+84.84	-15.42	602.96	603.01
P	21+94.84	-15.42	602.89	602.92
CL. Brg. Pier 3	22+08.44	-15.42	602.77	602.77
Q	22+18.44	-15.42	602.66	602.66
R	22+28.44	-15.42	602.54	602.55
S	22+38.44	-15.42	602.41	602.43
T	22+48.44	-15.42	602.26	602.27
U	22+58.44	-15.42	602.09	602.10
CL. Brg. Pier 4	22+68.46	-15.42	601.92	601.92
V	22+78.46	-15.42	601.73	601.75
W	22+88.46	-15.42	601.53	601.59
X	22+98.46	-15.42	601.35	601.42
Y	23+08.46	-15.42	601.19	601.26
Z	23+18.46	-15.42	601.06	601.10
CL. Brg. E. Abut.	23+26.00	-15.42	600.98	600.98
BK. E. ABUT.	23+27.24	-15.42	600.97	600.97

BEAM 5

Location	Station	Offset	Theoretical Grade Elevations	Theoretical Grade Elevations Adjusted for DL Deflection
BK. W. ABUT.	20+24.77	-7.71	601.49	601.49
CL. Brg. W. Abut.	20+26.02	-7.71	601.52	601.52
A	20+36.02	-7.71	601.74	601.79
B	20+46.02	-7.71	601.97	602.05
C	20+56.02	-7.71	602.20	602.28
D	20+66.02	-7.71	602.41	602.47
E	20+76.02	-7.71	602.59	602.61
CL. Brg. Pier 1	20+84.78	-7.71	602.73	602.73
F	20+94.78	-7.71	602.87	602.87
G	21+04.78	-7.71	602.99	603.00
H	21+14.78	-7.71	603.08	603.10
I	21+24.78	-7.71	603.15	603.16
J	21+34.78	-7.71	603.19	603.20
CL. Brg. Pier 2	21+44.84	-7.71	603.21	603.21
K	21+54.84	-7.71	603.21	603.23
L	21+64.84	-7.71	603.18	603.23
M	21+74.84	-7.71	603.14	603.19
N	21+84.84	-7.71	603.08	603.13
P	21+94.84	-7.71	603.00	603.03
CL. Brg. Pier 3	22+08.44	-7.71	602.88	602.88
Q	22+18.44	-7.71	602.78	602.78
R	22+28.44	-7.71	602.66	602.67
S	22+38.44	-7.71	602.52	602.54
T	22+48.44	-7.71	602.37	602.39
U	22+58.44	-7.71	602.21	602.21
CL. Brg. Pier 4	22+68.46	-7.71	602.03	602.03
V	22+78.46	-7.71	601.84	601.87
W	22+88.46	-7.71	601.64	601.70
X	22+98.46	-7.71	601.47	601.54
Y	23+08.46	-7.71	601.31	601.38
Z	23+18.46	-7.71	601.18	601.22
CL. Brg. E. Abut.	23+26.00	-7.71	601.09	601.09
BK. E. ABUT.	23+27.24	-7.71	601.08	601.08

STAGE I CONST. LINE

Location	Station	Offset	Theoretical Grade Elevations	Theoretical Grade Elevations Adjusted for DL Deflection
BK. W. ABUT.	20+24.77	-2.50	601.57	601.57
CL. Brg. W. Abut.	20+26.02	-2.50	601.59	601.59
A	20+36.02	-2.50	601.82	601.87
B	20+46.02	-2.50	602.05	602.13
C	20+56.02	-2.50	602.28	602.36
D	20+66.02	-2.50	602.49	602.54
E	20+76.02	-2.50	602.67	602.69
CL. Brg. Pier 1	20+84.78	-2.50	602.81	602.81
F	20+94.78	-2.50	602.95	602.95
G	21+04.78	-2.50	603.07	603.08
H	21+14.78	-2.50	603.16	603.18
I	21+24.78	-2.50	603.23	603.24
J	21+34.78	-2.50	603.27	603.28
CL. Brg. Pier 2	21+44.84	-2.50	603.29	603.29
K	21+54.84	-2.50	603.29	603.31
L	21+64.84	-2.50	603.26	603.30
M	21+74.84	-2.50	603.21	603.27
N	21+84.84	-2.50	603.16	603.21
P	21+94.84	-2.50	603.08	603.11
CL. Brg. Pier 3	22+08.44	-2.50	602.96	602.96
Q	22+18.44	-2.50	602.85	602.86
R	22+28.44	-2.50	602.73	602.75
S	22+38.44	-2.50	602.60	602.62
T	22+48.44	-2.50	602.45	602.46
U	22+58.44	-2.50	602.29	602.29
CL. Brg. Pier 4	22+68.46	-2.50	602.11	602.11
V	22+78.46	-2.50	601.92	601.95
W	22+88.46	-2.50	601.72	601.78
X	22+98.46	-2.50	601.54	601.62
Y	23+08.46	-2.50	601.39	601.46
Z	23+18.46	-2.50	601.26	601.29
CL. Brg. E. Abut.	23+26.00	-2.50	601.17	601.17
BK. E. ABUT.	23+27.24	-2.50	601.16	601.16

BEAM 6, P.G. & ℄ 63RD STREET

Location	Station	Offset	Theoretical Grade Elevations	Theoretical Grade Elevations Adjusted for DL Deflection
BK. W. ABUT.	20+24.77	0.00	601.60	601.60
CL. Brg. W. Abut.	20+26.02	0.00	601.63	601.63
A	20+36.02	0.00	601.86	601.91
B	20+46.02	0.00	602.09	602.17
C	20+56.02	0.00	602.31	602.39
D	20+66.02	0.00	602.52	602.58
E	20+76.02	0.00	602.71	602.73
CL. Brg. Pier 1	20+84.78	0.00	602.85	602.85
F	20+94.78	0.00	602.99	602.99
G	21+04.78	0.00	603.11	603.12
H	21+14.78	0.00	603.20	603.22
I	21+24.78	0.00	603.27	603.28
J	21+34.78	0.00	603.31	603.31
CL. Brg. Pier 2	21+44.84	0.00	603.33	603.33
K	21+54.84	0.00	603.33	603.34
L	21+64.84	0.00	603.30	603.34
M	21+74.84	0.00	603.25	603.31
N	21+84.84	0.00	603.19	603.25
P	21+94.84	0.00	603.12	603.15
CL. Brg. Pier 3	22+08.44	0.00	603.00	603.00
Q	22+18.44	0.00	602.89	602.89
R	22+28.44	0.00	602.77	602.79
S	22+38.44	0.00	602.64	602.66
T	22+48.44	0.00	602.49	602.50
U	22+58.44	0.00	602.33	602.33
CL. Brg. Pier 4	22+68.46	0.00	602.15	602.15
V	22+78.46	0.00	601.96	601.98
W	22+88.46	0.00	601.76	601.82
X	22+98.46	0.00	601.58	601.66
Y	23+08.46	0.00	601.43	601.49
Z	23+18.46	0.00	601.29	601.33
CL. Brg. E. Abut.	23+26.00	0.00	601.21	601.21
BK. E. ABUT.	23+27.24	0.00	601.20	601.20

BEAM 7

Location	Station	Offset	Theoretical Grade Elevations	Theoretical Grade Elevations Adjusted for DL Deflection
BK. W. ABUT.	20+24.77	7.71	601.49	601.49
CL. Brg. W. Abut.	20+26.02	7.71	601.52	601.52
A	20+36.02	7.71	601.74	601.79
B	20+46.02	7.71	601.97	602.05
C	20+56.02	7.71	602.20	602.28
D	20+66.02	7.71	602.41	602.47
E	20+76.02	7.71	602.59	602.61
CL. Brg. Pier 1	20+84.78	7.71	602.73	602.73
F	20+94.78	7.71	602.87	602.87
G	21+04.78	7.71	602.99	603.00
H	21+14.78	7.71	603.08	603.10
I	21+24.78	7.71	603.15	603.16
J	21+34.78	7.71	603.19	603.20
CL. Brg. Pier 2	21+44.84	7.71	603.21	603.21
K	21+54.84	7.71	603.21	603.23
L	21+64.84	7.71	603.18	603.23
M	21+74.84	7.71	603.14	603.19
N	21+84.84	7.71	603.08	603.13
P	21+94.84	7.71	603.00	603.03
CL. Brg. Pier 3	22+08.44	7.71	602.88	602.88
Q	22+18.44	7.71	602.78	602.78
R	22+28.44	7.71	602.66	602.67
S	22+38.44	7.71	602.52	602.54
T	22+48.44	7.71	602.37	602.39
U	22+58.44	7.71	602.21	602.21
CL. Brg. Pier 4	22+68.46	7.71	602.03	602.03
V	22+78.46	7.71	601.84	601.87
W	22+88.46	7.71	601.64	601.70
X	22+98.46	7.71	601.47	601.54
Y	23+08.46	7.71	601.31	601.38
Z	23+18.46	7.71	601.18	601.22
CL. Brg. E. Abut.	23+26.00	7.71	601.09	601.09
BK. E. ABUT.	23+27.24	7.71	601.08	601.08

BEAM 8

Location	Station	Offset	Theoretical Grade Elevations	Theoretical Grade Elevations Adjusted for DL Deflection
BK. W. ABUT.	20+24.77	15.42	601.37	601.37
CL. Brg. W. Abut.	20+26.02	15.42	601.40	601.40
A	20+36.02	15.42	601.63	601.68
B	20+46.02	15.42	601.86	601.93
C	20+56.02	15.42	602.08	602.16
D	20+66.02	15.42	602.29	602.35
E	20+76.02	15.42	602.48	602.50
CL. Brg. Pier 1	20+84.78	15.42	602.62	602.62
F	20+94.78	15.42	602.76	602.76
G	21+04.78	15.42	602.87	602.89
H	21+14.78	15.42	602.97	602.98
I	21+24.78	15.42	603.03	603.05
J	21+34.78	15.42	603.08	603.08
CL. Brg. Pier 2	21+44.84	15.42	603.10	603.10
K	21+54.84	15.42	603.09	603.11
L	21+64.84	15.42	603.07	603.11
M	21+74.84	15.42	603.02	603.08
N	21+84.84	15.42	602.96	603.01
P	21+94.84	15.42	602.89	602.92
CL. Brg. Pier 3	22+08.44	15.42	602.77	602.77
Q	22+18.44	15.42	602.66	602.66
R	22+28.44	15.42	602.54	602.55
S	22+38.44	15.42	602.41	602.43
T	22+48.44	15.42	602.26	602.27
U	22+58.44	15.42	602.09	602.10
CL. Brg. Pier 4	22+68.46	15.42	601.92	601.92
V	22+78.46	15.42	601.73	601.75
W	22+88.46	15.42	601.53	601.59
X	22+98.46	15.42	601.35	601.42
Y	23+08.46	15.42	601.19	601.26
Z	23+18.46	15.42	601.06	601.10
CL. Brg. E. Abut.	23+26.00	15.42	600.98	600.98
BK. E. ABUT.	23+27.24	15.42	600.97	600.97

BEAM 9

Location	Station	Offset	Theoretical Grade Elevations	Theoretical Grade Elevations Adjusted for DL Deflection
BK. W. ABUT.	20+24.77	23.13	601.26	601.26
CL. Brg. W. Abut.	20+26.02	23.13	601.28	601.28
A	20+36.02	23.13	601.51	601.56
B	20+46.02	23.13	601.74	601.82
C	20+56.02	23.13	601.97	602.05
D	20+66.02	23.13	602.18	602.23
E	20+76.02	23.13	602.36	602.38
CL. Brg. Pier 1	20+84.78	23.13	602.50	602.50
F	20+94.78	23.13	602.64	602.64
G	21+04.78	23.13	602.76	602.77
H	21+14.78	23.13	602.85	602.87
I	21+24.78	23.13	602.92	602.93
J	21+34.78	23.13	602.96	602.97
CL. Brg. Pier 2	21+44.84	23.13	602.98	602.98
K	21+54.84	23.13	602.98	603.00
L	21+64.84	23.13	602.95	602.99
M	21+74.84	23.13	602.91	602.96
N	21+84.84	23.13	602.85	602.90
P	21+94.84	23.13	602.77	602.80
CL. Brg. Pier 3	22+08.44	23.13	602.65	602.65
Q	22+18.44	23.13	602.54	602.55
R	22+28.44	23.13	602.42	602.44
S	22+38.44	23.13	602.29	602.31
T	22+48.44	23.13	602.14	602.16
U	22+58.44	23.13	601.98	601.98
CL. Brg. Pier 4	22+68.46	23.13	601.80	601.80
V	22+78.46	23.13	601.61	601.64
W	22+88.46	23.13	601.41	601.47
X	22+98.46	23.13	601.23	601.31
Y	23+08.46	23.13	601.08	601.15
Z	23+18.46	23.13	600.95	600.98
CL. Brg. E. Abut.	23+26.00	23.13	600.86	600.86
BK. E. ABUT.	23+27.24	23.13	600.85	600.85

BEAM 10

Location	Station	Offset	Theoretical Grade Elevations	Theoretical Grade Elevations Adjusted for DL Deflection
BK. W. ABUT.	20+24.77	30.83	601.14	601.14
CL. Brg. W. Abut.	20+26.02	30.83	601.17	601.17
A	20+36.02	30.83	601.40	601.44
B	20+46.02	30.83	601.62	601.70
C	20+56.02	30.83	601.85	601.93
D	20+66.02	30.83	602.06	602.12
E	20+76.02	30.83	602.24	602.27
CL. Brg. Pier 1	20+84.78	30.83	602.39	602.39
F	20+94.78	30.83	602.53	602.53
G	21+04.78	30.83	602.64	602.65
H	21+14.78	30.83	602.73	602.75
I	21+24.78	30.83	602.80	602.82
J	21+34.78	30.83	602.85	602.85
CL. Brg. Pier 2	21+44.84	30.83	602.87	602.87
K	21+54.84	30.83	602.86	602.88
L	21+64.84	30.83	602.83	602.88
M	21+74.84	30.83	602.79	602.85
N	21+84.84	30.83	602.73	602.78
P	21+94.84	30.83	602.66	602.69
CL. Brg. Pier 3	22+08.44	30.83	602.53	602.53
Q	22+18.44	30.83	602.43	602.43
R	22+28.44	30.83	602.31	602.32
S	22+38.44	30.83	602.17	602.19
T	22+48.44	30.83	602.03	602.04
U	22+58.44	30.83	601.86	601.87
CL. Brg. Pier 4	22+68.46	30.83	601.69	601.69
V	22+78.46	30.83	601.50	601.52
W	22+88.46	30.83	601.30	601.35
X	22+98.46	30.83	601.12	601.19
Y	23+08.46	30.83	600.96	601.03
Z	23+18.46	30.83	600.83	600.87
CL. Brg. E. Abut.	23+26.00	30.83	600.75	600.75
BK. E. ABUT.	23+27.24	30.83	600.74	600.74

BEAM 11

Location	Station	Offset	Theoretical Grade Elevations	Theoretical Grade Elevations Adjusted for DL Deflection
BK. W. ABUT.	20+24.77	38.54	601.14	601.14
CL. Brg. W. Abut.	20+26.02	38.54	601.17	601.17
A	20+36.02	38.54	601.40	601.44
B	20+46.02	38.54	601.62	601.70
C	20+56.02	38.54	601.85	601.93
D	20+66.02	38.54	602.06	602.12
E	20+76.02	38.54	602.24	602.27
CL. Brg. Pier 1	20+84.78	38.54	602.39	602.39
F	20+94.78	38.54	602.53	602.53
G	21+04.78	38.54	602.64	602.65
H	21+14.78	38.54	602.73	602.75
I	21+24.78	38.54	602.80	602.82
J	21+34.78	38.54	602.85	602.85
CL. Brg. Pier 2	21+44.84	38.54	602.87	602.87
K	21+54.84	38.54	602.86	602.88
L	21+64.84	38.54	602.83	602.88
M	21+74.84	38.54	602.79	602.85
N	21+84.84	38.54	602.73	602.78
P	21+94.84	38.54	602.66	602.69
CL. Brg. Pier 3	22+08.44	38.54	602.53	602.53
Q	22+18.44	38.54	602.43	602.43
R	22+28.44	38.54	602.31	602.32
S	22+38.44	38.54	602.17	602.19
T	22+48.44	38.54	602.03	602.04
U	22+58.44	38.54	601.86	601.87
CL. Brg. Pier 4	22+68.46	38.54	601.69	601.69
V	22+78.46	38.54	601.50	601.52
W	22+88.46	38.54	601.30	601.35
X	22+98.46	38.54	601.12	601.19
Y	23+08.46	38.54	600.96	601.03
Z	23+18.46	38.54	600.83	600.87
CL. Brg. E. Abut.	23+26.00	38.54	600.75	600.75
BK. E. ABUT.	23+27.24	38.54	600.74	600.74

NORTH EDGE OF APPROACH

Location	Station	Offset	Theoretical Grade Elevations
W. End W. Appr. Slab	19+93.60	-40.50	600.57
A1	20+03.60	-40.50	600.78
A2	20+13.60	-40.50	601.00
E. End W. Appr. Slab	20+23.60	-40.50	601.23

NORTH GUTTER LINE

Location	Station	Offset	Theoretical Grade Elevations
W. End W. Appr. Slab	19+93.60	-30.50	600.46
A1	20+03.60	-30.50	600.67
A2	20+13.60	-30.50	600.89
E. End W. Appr. Slab	20+23.60	-30.50	601.12

STAGE II CONST. LINE

Location	Station	Offset	Theoretical Grade Elevations
W. End W. Appr. Slab	19+93.60	-25.63	600.53
A1	20+03.60	-25.63	600.74
A2	20+13.60	-25.63	600.96
E. End W. Appr. Slab	20+23.60	-25.63	601.19

STAGE I CONST. LINE

Location	Station	Offset	Theoretical Grade Elevations
W. End W. Appr. Slab	19+93.60	-2.50	600.88
A1	20+03.60	-2.50	601.09
A2	20+13.60	-2.50	601.31
E. End W. Appr. Slab	20+23.60	-2.50	601.54

℄ 63RD STREET & P.G.

Location	Station	Offset	Theoretical Grade Elevations
W. End W. Appr. Slab	19+93.60	0.00	600.91
A1	20+03.60	0.00	601.12
A2	20+13.60	0.00	601.35
E. End W. Appr. Slab	20+23.60	0.00	601.58

SOUTH GUTTER LINE

Location	Station	Offset	Theoretical Grade Elevations
W. End W. Appr. Slab	19+93.60	30.50	600.46
A1	20+03.60	30.50	600.67
A2	20+13.60	30.50	600.89
E. End W. Appr. Slab	20+23.60	30.50	601.12

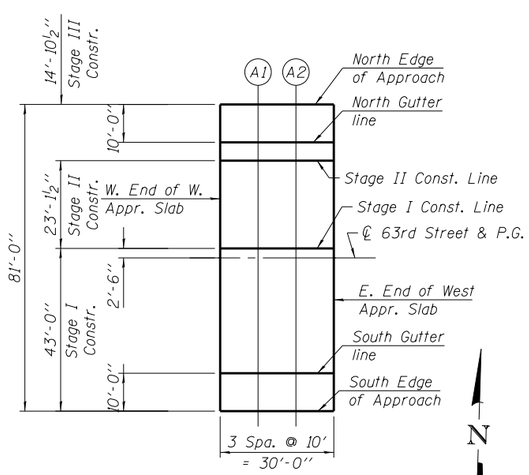

WEST APPROACH PLAN

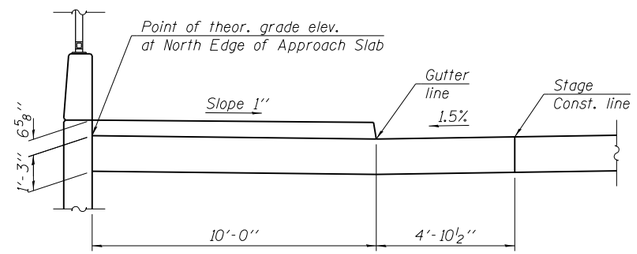

SECTION THRU NORTH SIDEWALK

(Looking East)

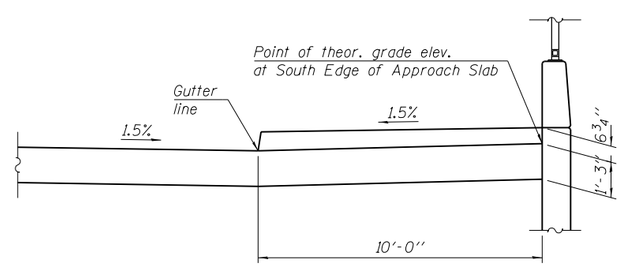

SECTION THRU SOUTH SIDEWALK

(Looking East)

SOUTH EDGE OF APPROACH

Location	Station	Offset	Theoretical Grade Elevations
W. End W. Appr. Slab	19+93.60	40.50	600.71
A1	20+03.60	40.50	600.92
A2	20+13.60	40.50	601.14
E. End W. Appr. Slab	20+23.60	40.50	601.37

H:\Jobs2011\20113022\CAD\Structural\dgn\016-1149_Final\00\D160J15-s13-towa.dgn
5/20/2013 11:24:02 AM

GRAEF
8501 W. Higgins Road; Suite 280
Chicago, Illinois 60631; (773) 399-0112

USER NAME =	DESIGNED - J.Z.	REVISED -	
	CHECKED - J.A.Z.	REVISED -	
PLOT SCALE =	DRAWN - E.E.J.	REVISED -	
PLOT DATE =	DATE - 5/17/2013	REVISED -	

STATE OF ILLINOIS
DEPARTMENT OF TRANSPORTATION

TOP OF WEST APPROACH SLAB ELEVATIONS
STRUCTURE NO. 016-1149

SHEET NO. S13 OF 50 SHEETS

F.A.I. RTE.	SECTION	COUNTY	TOTAL SHEETS	SHEET NO.
94	1920-B	COOK	137	72

CONTRACT NO. 60J15

ILLINOIS FED. AID PROJECT

NORTH EDGE OF APPROACH

Location	Station	Offset	Theoretical Grade Elevations
W. End E. Appr. Slab	23+28.41	-40.50	600.84
A3	23+38.41	-40.50	600.75
A4	23+48.41	-40.50	600.69
E. End E. Appr. Slab	23+58.41	-40.50	600.66

NORTH GUTTER LINE

Location	Station	Offset	Theoretical Grade Elevations
W. End E. Appr. Slab	23+28.41	-30.50	600.73
A3	23+38.41	-30.50	600.64
A4	23+48.41	-30.50	600.58
E. End E. Appr. Slab	23+58.41	-30.50	600.55

STAGE II CONST. LINE

Location	Station	Offset	Theoretical Grade Elevations
W. End E. Appr. Slab	23+28.41	-25.63	600.80
A3	23+38.41	-25.63	600.72
A4	23+48.41	-25.63	600.66
E. End E. Appr. Slab	23+58.41	-25.63	600.62

STAGE I CONST. LINE

Location	Station	Offset	Theoretical Grade Elevations
W. End E. Appr. Slab	23+28.41	-2.50	601.15
A3	23+38.41	-2.50	601.06
A4	23+48.41	-2.50	601.00
E. End E. Appr. Slab	23+58.41	-2.50	600.97

℄ 63RD STREET & P.G.

Location	Station	Offset	Theoretical Grade Elevations
W. End E. Appr. Slab	23+28.41	0.00	601.19
A3	23+38.41	0.00	601.10
A4	23+48.41	0.00	601.04
E. End E. Appr. Slab	23+58.41	0.00	601.00

SOUTH GUTTER LINE

Location	Station	Offset	Theoretical Grade Elevations
W. End E. Appr. Slab	23+28.41	30.50	600.73
A3	23+38.41	30.50	600.64
A4	23+48.41	30.50	600.58
E. End E. Appr. Slab	23+58.41	30.50	600.55

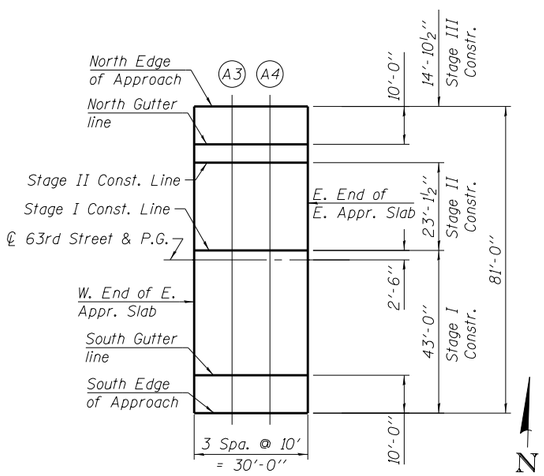

EAST APPROACH PLAN

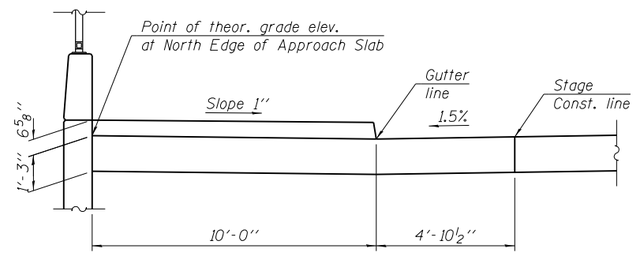

SECTION THRU NORTH SIDEWALK

(Looking East)

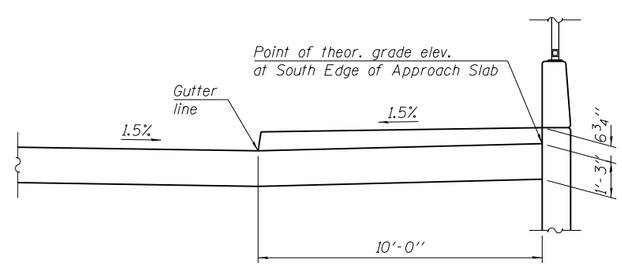

SECTION THRU SOUTH SIDEWALK

(Looking East)

SOUTH EDGE OF APPROACH

Location	Station	Offset	Theoretical Grade Elevations
W. End E. Appr. Slab	23+28.41	40.50	600.98
A3	23+38.41	40.50	600.89
A4	23+48.41	40.50	600.83
E. End E. Appr. Slab	23+58.41	40.50	600.80

H:\Jobs2011\2011302\CAD\Structural\dgn\016-1149_Final\00\D160J15-s14-toea.dgn
5/20/2013 11:24:03 AM

GRAEF
8501 W. Higgins Road; Suite 280
Chicago, Illinois 60631; (773) 399-0112

USER NAME =	DESIGNED - J.Z.	REVISED -	
	CHECKED - J.A.Z.	REVISED -	
PLOT SCALE =	DRAWN - E.E.J.	REVISED -	
PLOT DATE =	DATE - 5/17/2013	REVISED -	

STATE OF ILLINOIS
DEPARTMENT OF TRANSPORTATION

TOP OF EAST APPROACH SLAB ELEVATIONS
STRUCTURE NO. 016-1149

SHEET NO. S14 OF 50 SHEETS

F.A.I. RTE.	SECTION	COUNTY	TOTAL SHEETS	SHEET NO.
94	1920-B	COOK	137	73

CONTRACT NO. 60J15

ILLINOIS FED. AID PROJECT

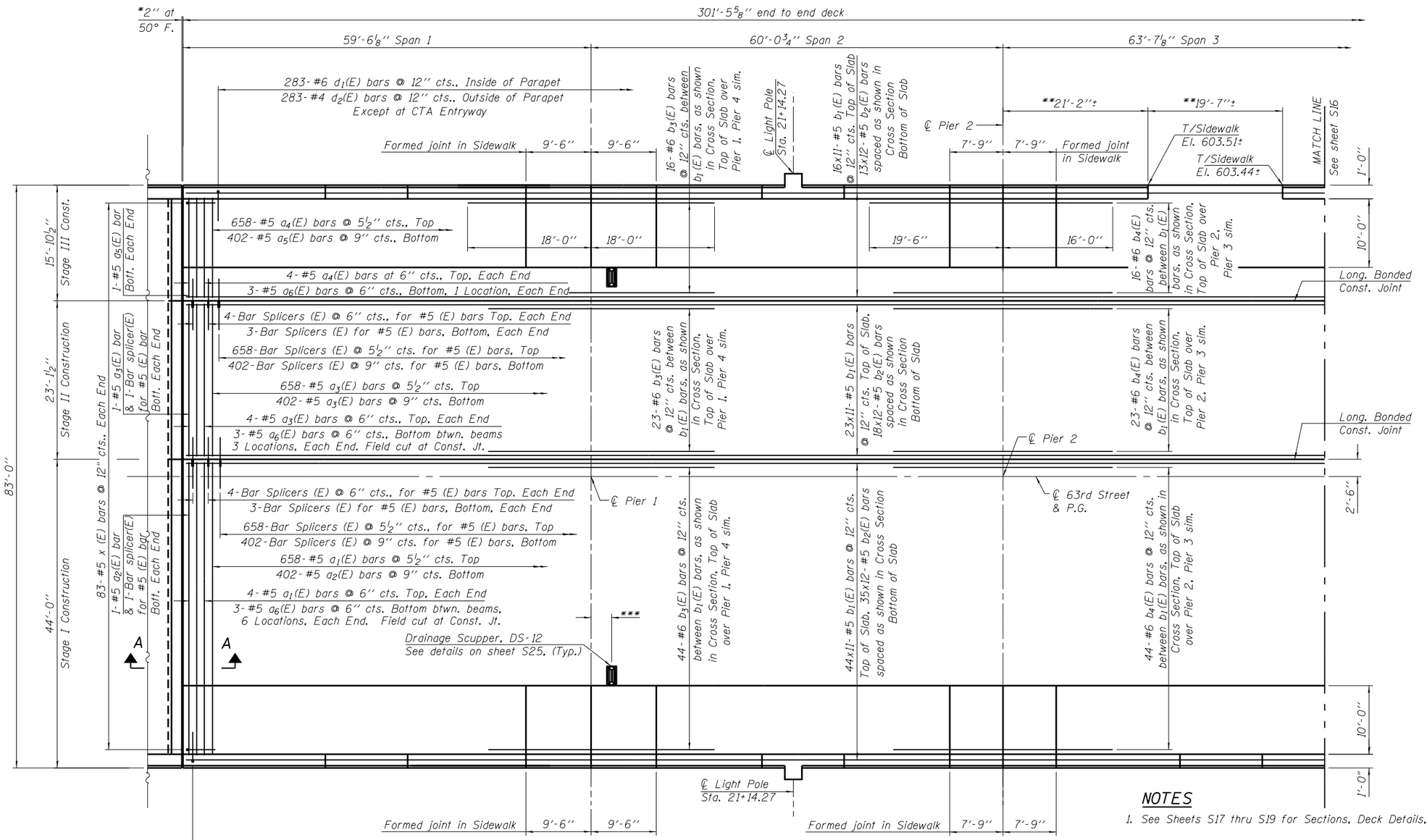

PARTIAL PLAN

N

MINIMUM BAR LAP

#5 bar = 3'-3''

NOTES

1. See Sheets S17 thru S19 for Sections, Deck Details, Parapet Reinforcement and Bill of Material.
2. Cut Longitudinal Reinforcement to clear Drainage Scuppers.
3. *Expansion Joint dimensions are based on Rolled Rail Joint. If the Contractor elects to use the Welded Rail Joint, deck dimensions may require adjustments to satisfy the details on Sheet S24.
4. **Parapet cut-out to match CTA Entryway. Back of sidewalk elevations to match existing edge of CTA entryway platform elevations. The Contractor shall remove and reinstall the expansion joint and cover plate at the CTA Station (including any embedded frames and seals if applicable). If the existing expansion joint material cannot be removed without being damaged, the expansion joint shall be replaced with a similar expansion joint approved by the Engineer. This cost shall be included in Concrete Superstructure.
5. ***Scupper locations shall be determined by the Drainage System pipe supports at the piers. See Sheet S-48.
6. Bar indicated thus 44x11-#5 etc. indicates 44 lines of bars with 11 lengths per line.

GRAEF
8501 W. Higgins Road; Suite 280
Chicago, Illinois 60631; (773) 399-0112

USER NAME =	DESIGNED - J.Z.	REVISED -	
	CHECKED - J.A.Z.	REVISED -	
PLOT SCALE =	DRAWN - E.E.J.	REVISED -	
PLOT DATE =	DATE - 5/17/2013	REVISED -	

STATE OF ILLINOIS
DEPARTMENT OF TRANSPORTATION

DECK PLAN I
STRUCTURE NO. 016-1149
SHEET NO. S15 OF 50 SHEETS

F.A.I. RTE.	SECTION	COUNTY	TOTAL SHEETS	SHEET NO.
94	1920-B	COOK	137	74

CONTRACT NO. 60J15
ILLINOIS FED. AID PROJECT

H:\Jobs20113022\CAD\Structural\dgn\016-1149_Final\00\D160J15-s15-deck-pll.dgn
5/20/2013 11:24:03 AM

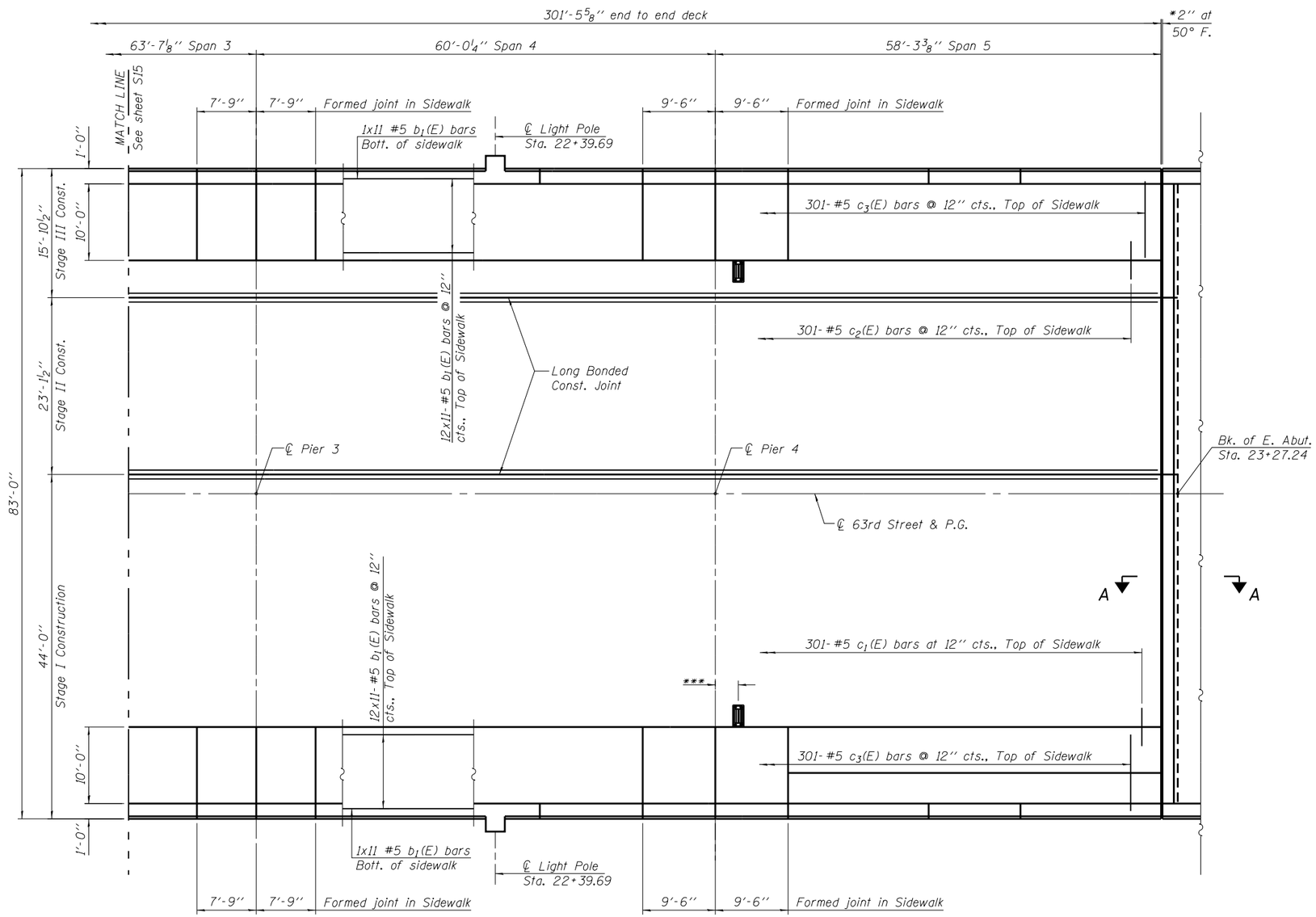

PARTIAL PLAN

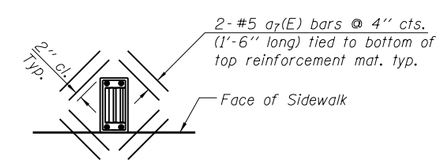

DETAIL AT SCUPPER

N

MINIMUM BAR LAP

#5 bar = 3'-3"

NOTES

1. See Sheets S17 thru S19 for Sections, Deck Details, Parapet Reinforcement and Bill of Material.
2. Cut Longitudinal Reinforcement to clear Drainage Scuppers.
3. *Expansion Joint dimensions are based on Rolled Rail Joint. If the Contractor elects to use the Welded Rail Joint, deck dimensions may require adjustments to satisfy the details on Sheet S24.
4. ***Scupper locations shall be determined by the Drainage System pipe supports at the piers. See Sheet S-48.
5. Bars indicated thus 12x11-#5 etc. indicates 12 lines of bars with 11 lengths per line.

H:\Jobs2011\2013022\CAD\Structural\dgn\016-1149_Final\00\D160J15-s16-deck-pl2.dgn
5/20/2013 11:24:04 AM

GRAEF
8501 W. Higgins Road; Suite 280
Chicago, Illinois 60631; (773) 399-0112

USER NAME =	DESIGNED - J.Z.	REVISED -	
	CHECKED - J.A.Z.	REVISED -	
PLOT SCALE =	DRAWN - E.E.J.	REVISED -	
PLOT DATE =	DATE - 5/17/2013	REVISED -	

STATE OF ILLINOIS
DEPARTMENT OF TRANSPORTATION

DECK PLAN II
STRUCTURE NO. 016-1149
SHEET NO. S16 OF 50 SHEETS

F.A.I. RTE.	SECTION	COUNTY	TOTAL SHEETS	SHEET NO.
94	1920-B	COOK	137	75
		CONTRACT NO. 60J15		
		ILLINOIS FED. AID PROJECT		

NOTES

1. See Sheet S19 for Bill of Material.
2. Cut longitudinal reinforcement to clear drainage scuppers.
3. For conduit noted thus *, cost of inserts and hangers are included with "Conduit Attached to Structure, 3" Dia., Galvanized Steel". Coordinate with the Electrical Contractor.
4. For conduit noted thus **, cost of inserts and hangers are included with "Conduit Attached to Structure, 3" Dia., PVC Coated Galvanized Steel". Coordinate with the Electrical Contractor.
5. For conduit noted thus ***, cost of inserts and hangers or clamps are included with "Conduit Attached to Structure, 1" Dia., PVC Coated Galvanized Steel". Coordinate with the Electrical Contractor.

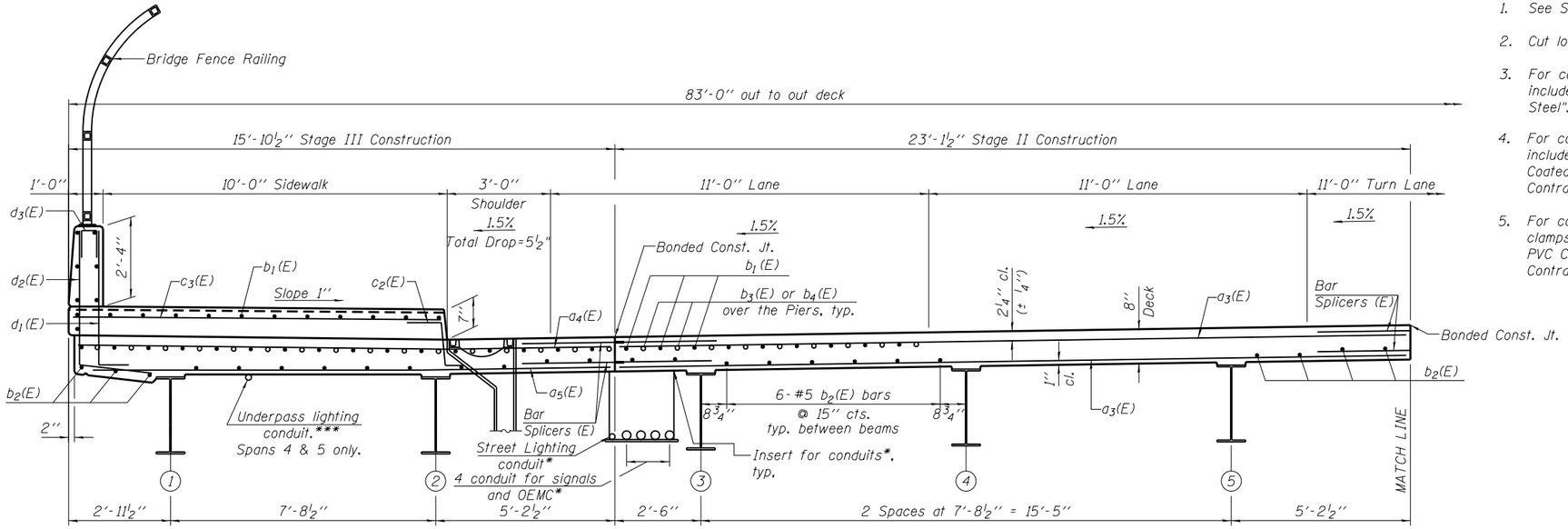

NEAR PIER

CROSS SECTION (STAGES II & III CONSTRUCTION)

(Looking East)

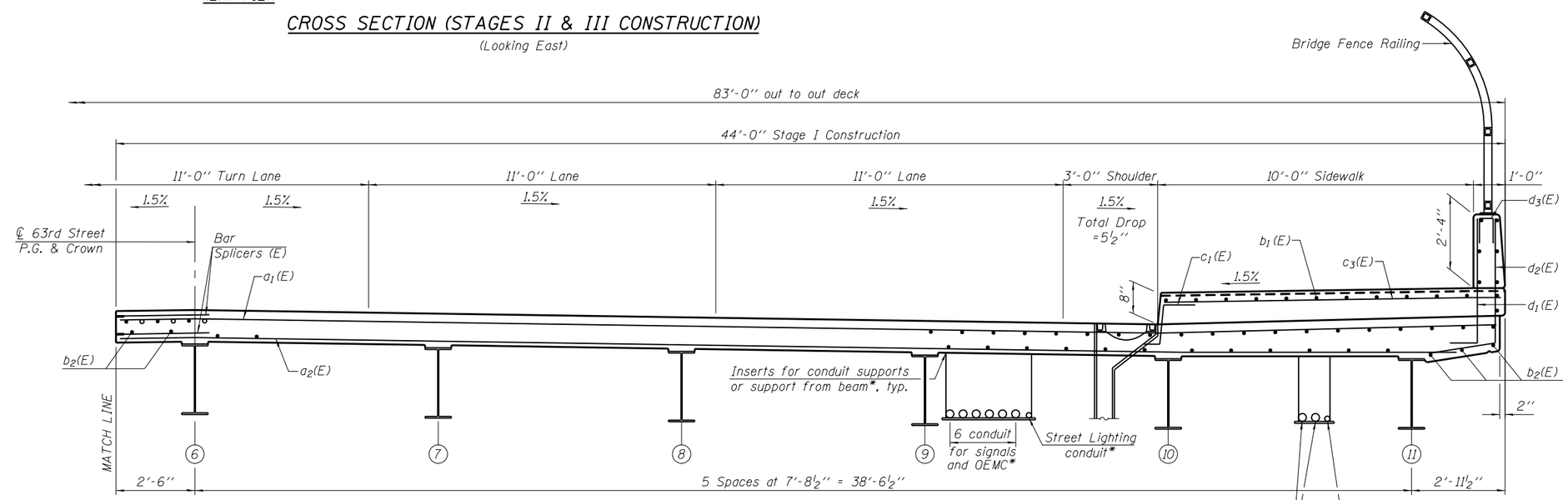

NEAR MIDSPAN

CROSS SECTION (STAGE I CONSTRUCTION)

(Looking East)

H:\Jobs2011\2011302\CAD\Structural\dgn\016-1149_Final\00\D160J15-s17-deck-sc.dgn
5/20/2013 11:24:04 AM

GRāEF 8501 W. Higgins Road; Suite 280 Chicago, Illinois 60631; (773) 399-0112	USER NAME =	DESIGNED - J.Z.	REVISED -	STATE OF ILLINOIS DEPARTMENT OF TRANSPORTATION	DECK SECTIONS STRUCTURE NO. 016-1149	F.A.I. RTE.	SECTION	COUNTY	TOTAL SHEETS / SHEET NO.
		CHECKED - J.A.Z.	REVISED -			94	1920-B	COOK	137 / 76
	PLOT SCALE =	DRAWN - E.E.J.	REVISED -					CONTRACT NO. 60J15	
	PLOT DATE =	DATE - 5/17/2013	REVISED -		SHEET NO. S17 OF 50 SHEETS		ILLINOIS	FED. AID PROJECT	

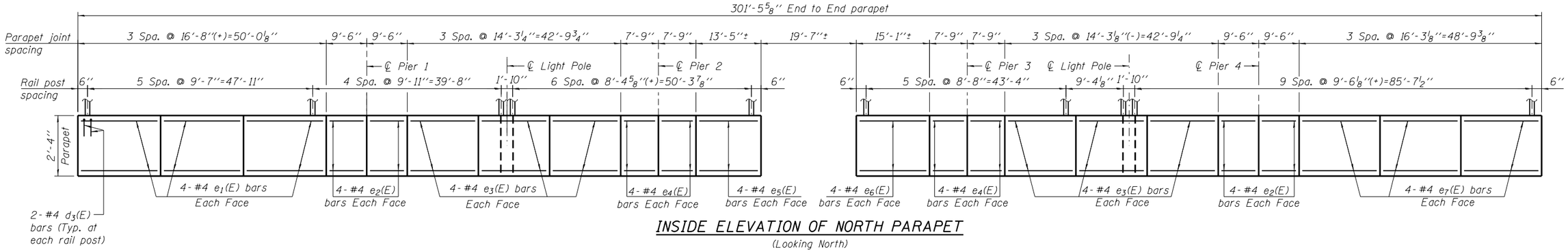

INSIDE ELEVATION OF NORTH PARAPET

(Looking North)

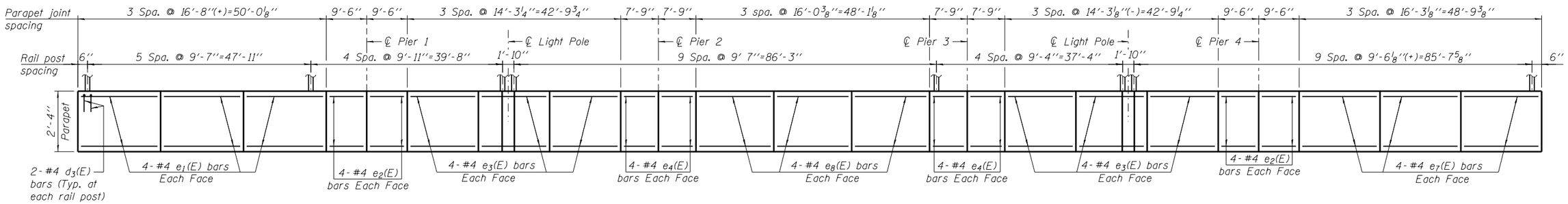

OUTSIDE ELEVATION OF SOUTH PARAPET

(Looking North)

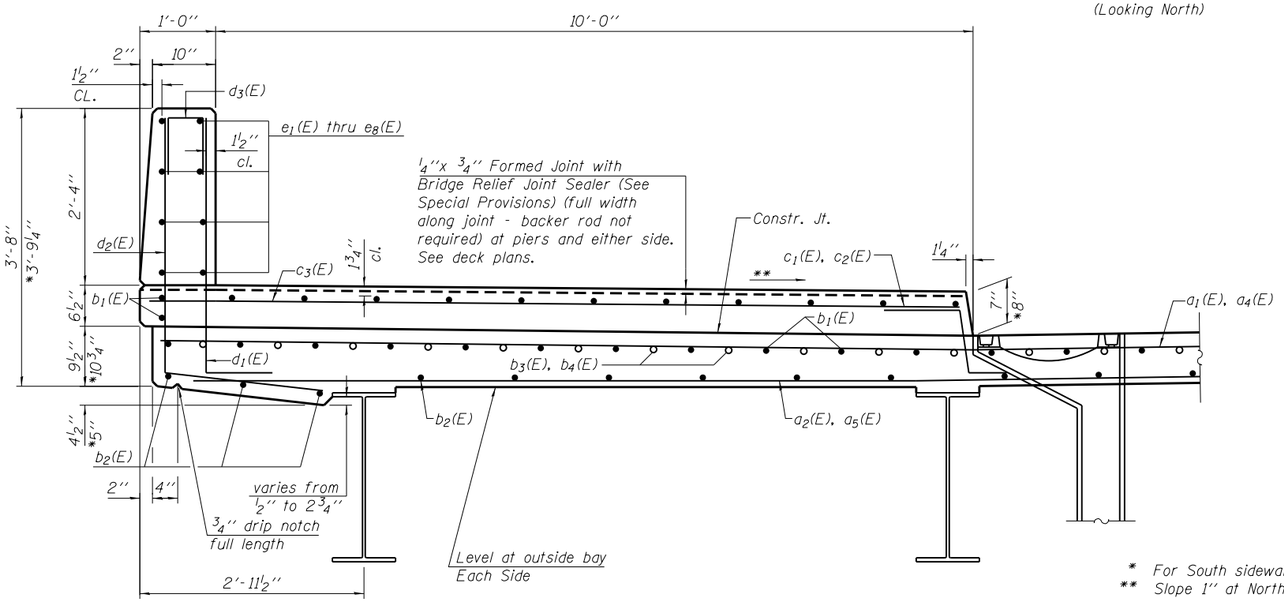

* For South sidewalk
** Slope 1" at North sidewalk, 1.5% at South sidewalk

SECTION THRU SIDEWALK AND PARAPET

(Looking East, North sidewalk shown, South sidewalk opp. hand)

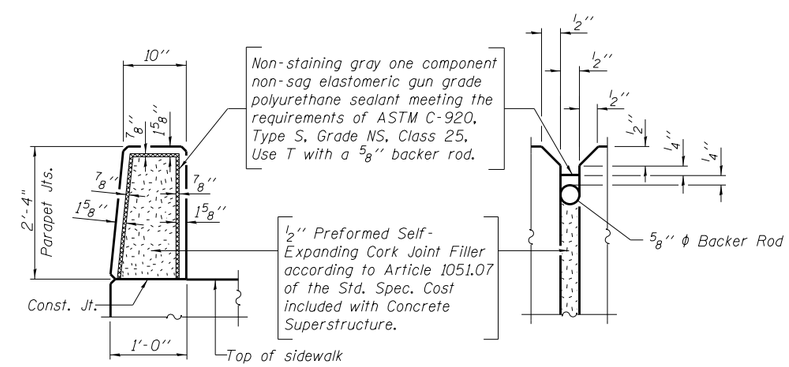

PARAPET JOINT DETAILS

H:\Jobs20II\20II3022\CAD\Structural\dgn\016-II49_Final\00\DI60JI5-sI8-deck-dtI.dgn
5/20/2013 11:24:04 AM

GRAEF 8501 W. Higgins Road; Suite 280 Chicago, Illinois 60631; (773) 399-0112	USER NAME =	DESIGNED - J.Z.	REVISED -	STATE OF ILLINOIS DEPARTMENT OF TRANSPORTATION	DECK DETAILS I STRUCTURE NO. 016-1149	F.A.I. RTE.	SECTION	COUNTY	TOTAL SHEETS / SHEET NO.
		CHECKED - J.A.Z.	REVISED -			94	1920-B	COOK	137 / 77
	PLOT SCALE =	DRAWN - E.E.J.	REVISED -			CONTRACT NO. 60J15			
	PLOT DATE =	DATE - 5/17/2013	REVISED -		SHEET NO. S18 OF 50 SHEETS	ILLINOIS FED. AID PROJECT			

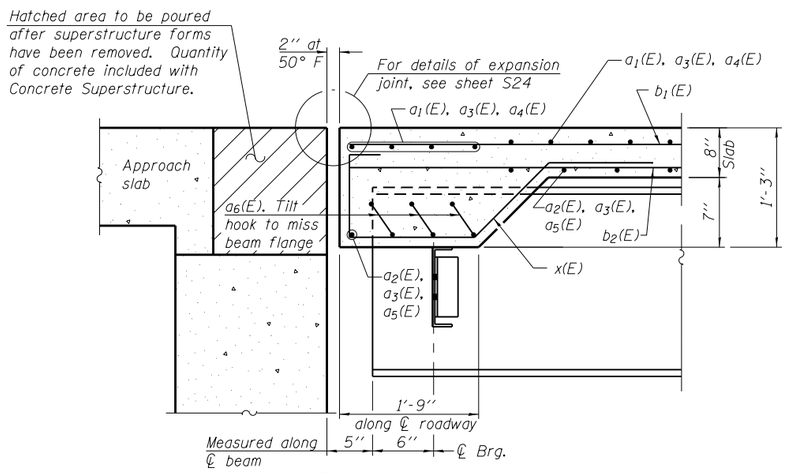

SECTION A-A

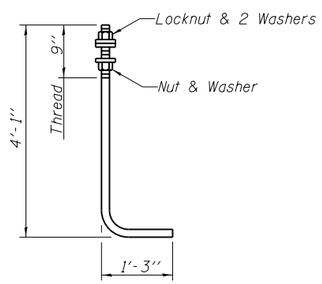

ANCHOR ROD

Diameter as specified for light poles.
(ASTM F 1554 Grade 105)

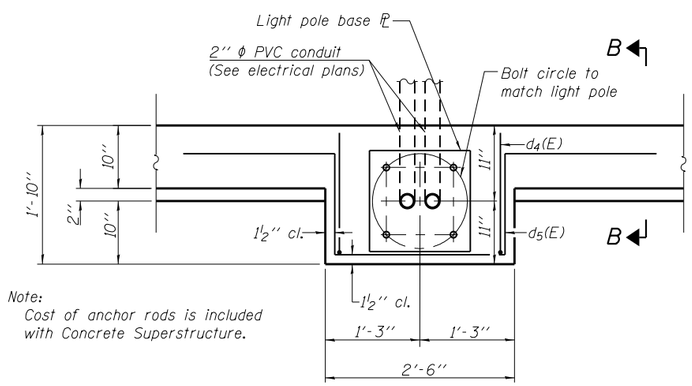

Note:
Cost of anchor rods is included with Concrete Superstructure.

PLAN-LIGHT POLE BASE

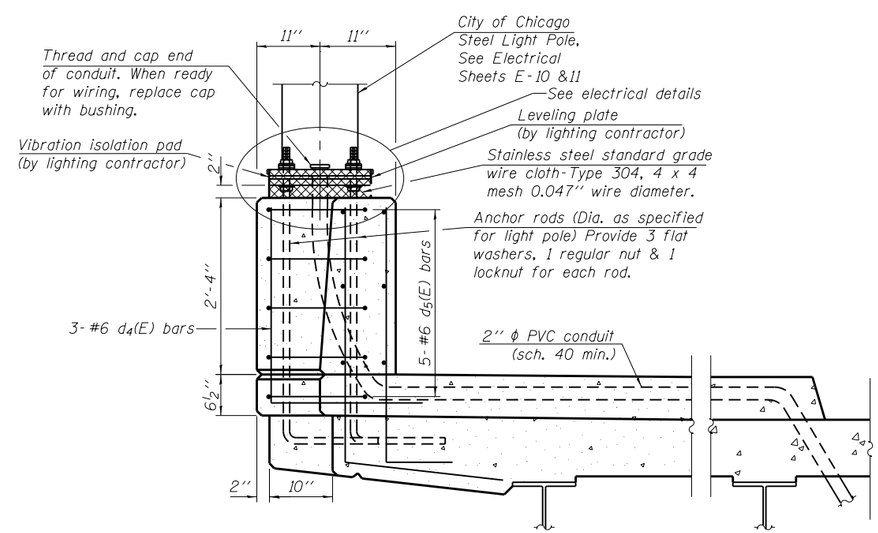

SECTION B-B

(Typical, 4 Locations)

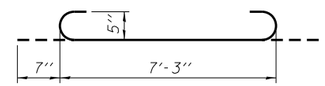

a_6(E) BAR

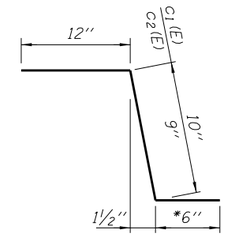

BARS c_1(E) & c_2(E)

*In lieu of bottom leg, the deck may be drilled and the c_1(E) and c_2(E) bars may be set according to Article 509.06 of the Standard Specifications. Drilled holes shall be roughened or scored per manufacturer's recommendations. Maximum depth of hole shall not exceed 6''. Contractor shall take all necessary precautions to prevent drilled hole interference with deck reinforcement bars. Locate longitudinal bars to miss drilled locations. Locate drilled holes to miss tranverse bars in deck.

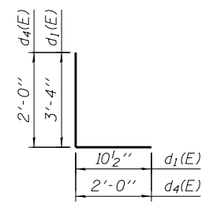

BARS d_1(E) & d_4(E)

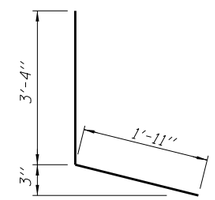

BAR d_2(E)

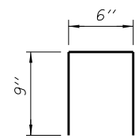

BAR d_3(E)

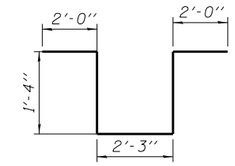

BAR d_5(E)

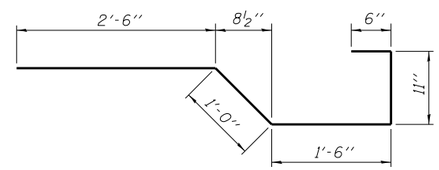

BAR x(E)

SUPERSTRUCTURE BILL OF MATERIAL

Bar	No.	Size	Length	Shape
a_1(E)	666	#5	43'-6''	
a_2(E)	404	#5	42'-0''	
a_3(E)	1070	#5	22'-9''	
a_4(E)	666	#5	15'-4''	
a_5(E)	404	#5	14'-4''	
a_6(E)	60	#5	8'-5''	
a_7(E)	32	#5	1'-6''	
b_1(E)	1199	#5	30'-6''	
b_2(E)	792	#5	28'-4''	
b_3(E)	166	#6	36'-0''	
b_4(E)	166	#6	35'-6''	
c_1(E)	301	#5	2'-4''	
c_2(E)	301	#5	2'-3''	
c_3(E)	602	#5	10'-6''	
d_1(E)	584	#6	4'-3''	
d_2(E)	584	#4	5'-3''	
d_3(E)	140	#4	2'-0''	
d_4(E)	12	#6	4'-0''	
d_5(E)	20	#6	8'-11''	
e_1(E)	48	#4	16'-4''	
e_2(E)	64	#4	9'-2''	
e_3(E)	96	#4	13'-11''	
e_4(E)	64	#4	7'-5''	
e_5(E)	8	#4	13'-1''	
e_6(E)	8	#4	14'-9''	
e_7(E)	48	#4	15'-11''	
e_8(E)	24	#4	15'-8''	
x (E)	166	#5	6'-5''	
Reinforcement Bars, Epoxy Coated			Pound	188,430
Concrete Superstructure			Cu. Yds.	867.0

GRÄEF
8501 W. Higgins Road; Suite 280
Chicago, Illinois 60631; (773) 399-0112

USER NAME =	DESIGNED - J.Z.	REVISED -	
	CHECKED - J.A.Z.	REVISED -	
PLOT SCALE =	DRAWN - E.E.J.	REVISED -	
PLOT DATE =	DATE - 5/17/2013	REVISED -	

STATE OF ILLINOIS
DEPARTMENT OF TRANSPORTATION

DECK DETAILS II
STRUCTURE NO. 016-1149
SHEET NO. S19 OF 50 SHEETS

F.A.I. RTE.	SECTION	COUNTY	TOTAL SHEETS	SHEET NO.
94	1920-B	COOK	137	78

CONTRACT NO. 60J15
ILLINOIS FED. AID PROJECT

H:\Jobs20II\20II3022\CAD\Structural\dgn\016-1149_Final\00\D160J15-s19-deck-d12.dgn
5/20/2013 11:24:05 AM

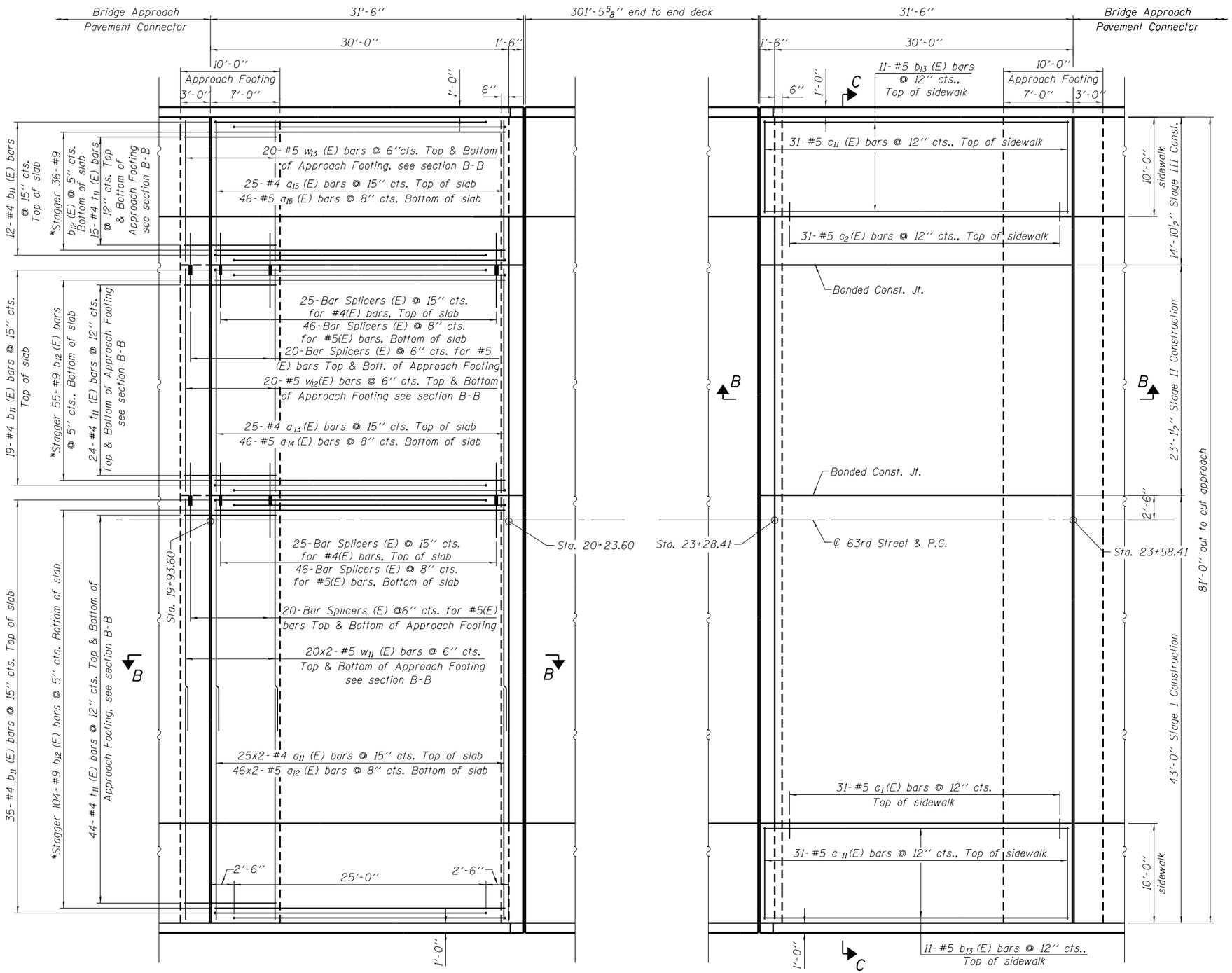

WEST APPROACH SLAB

* Tilt #9 b_{12} (E) bars as required to maintain clearance.

EAST APPROACH SLAB

MINIMUM BAR LAP

#4 bar = 2'-11"
#5 bar = 3'-3"

NOTES

1. See Sheet S21 for Sections, Details and Bill of Material.
2. See Sheet S3 and S4 for Construction Staging.

H:\Jobs20li\20li3022\CAD\Structural\dgn\016-li49_Final\00\D160J15-s20-appr-pl.dgn
5/20/2013 11:24:05 AM

GRÄEF
8501 W. Higgins Road; Suite 280
Chicago, Illinois 60631; (773) 399-0112

USER NAME =	DESIGNED - J.Z.	REVISED -	
	CHECKED - J.A.Z.	REVISED -	
PLOT SCALE =	DRAWN - E.E.J.	REVISED -	
PLOT DATE =	DATE - 5/17/2013	REVISED -	

STATE OF ILLINOIS
DEPARTMENT OF TRANSPORTATION

BRIDGE APPROACH SLAB
STRUCTURE NO. 016-1149

SHEET NO. S20 OF 50 SHEETS

F.A.I. RTE.	SECTION	COUNTY	TOTAL SHEETS	SHEET NO.
94	1920-B	COOK	137	79
		CONTRACT NO. 60J15		
		ILLINOIS FED. AID PROJECT		

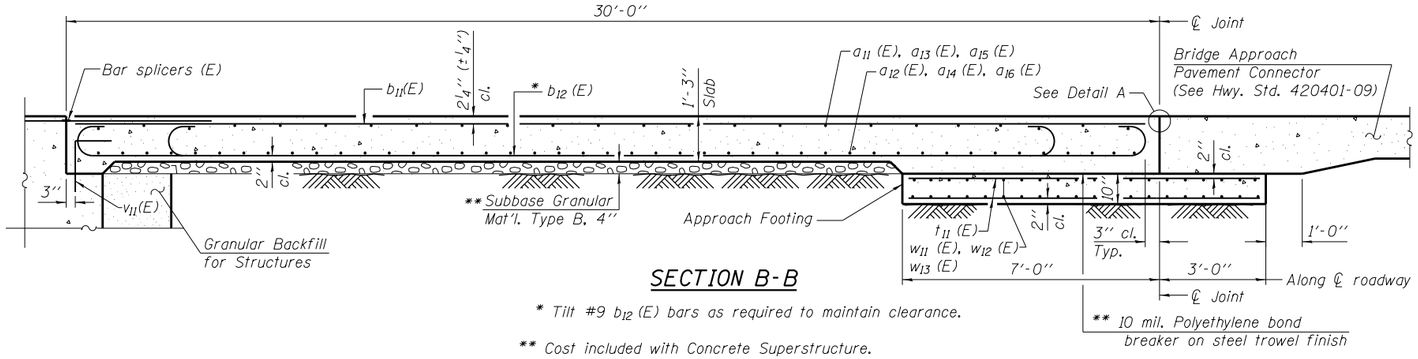

SECTION B-B

* Tilt #9 b_{12} (E) bars as required to maintain clearance.

** Cost included with Concrete Superstructure.

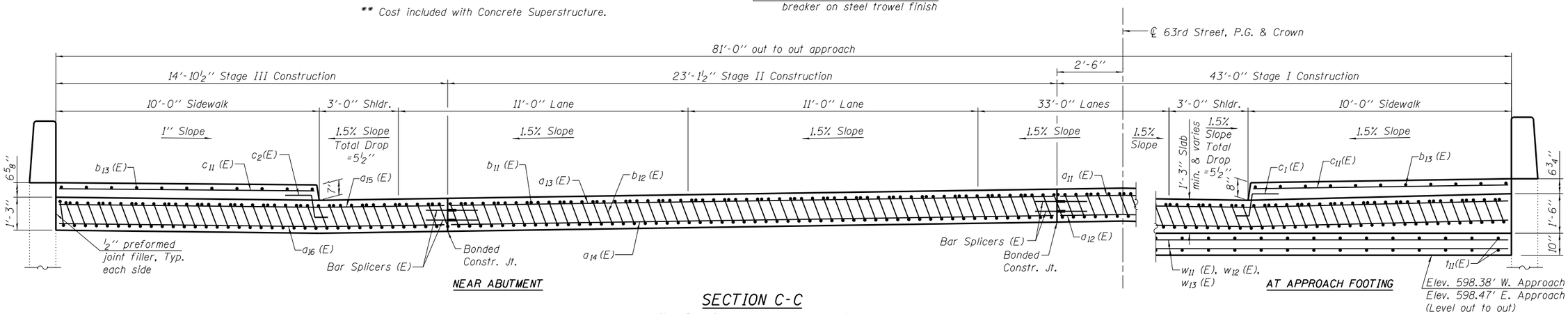

NEAR ABUTMENT

AT APPROACH FOOTING

SECTION C-C

(See Plan for dimensions not shown)

*** Cost included with Concrete Superstructure.

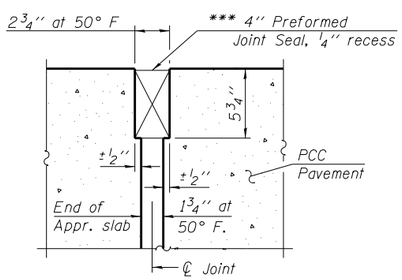

RIGID PAVEMENT

DETAIL A

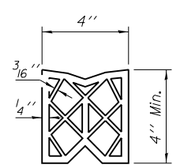

PREFORMED JOINT SEAL

NOTES

1. Approach slab and sidewalk concrete shall be paid for as Concrete Superstructure.
2. Approach footing concrete shall be paid for as Concrete Structures.
3. Reinforcement shall be paid for as Reinforcement Bars, Epoxy Coated.
4. The approach footing maximum applied service bearing pressure (Qmax) = 2.0 ksf.
5. For bar splicer details, see sheet S49.
6. Cost of excavation for approach footing included with Concrete Structures.
7. For Granular Backfill for Structures and drainage treatment details, see sheet S34.

*In lieu of bottom leg, the deck may be drilled and the c_1(E) and c_2(E) bars may be set according to Article 509.06 of the Standard Specifications. Drilled holes shall be roughened or scored per manufacturer's recommendations. Maximum depth of hole shall not exceed 6". Contractor shall take all necessary precautions to prevent drilled hole interference with deck reinforcement bars. Locate longitudinal bars to miss drilled locations. Locate drilled holes to miss transverse bars in deck.

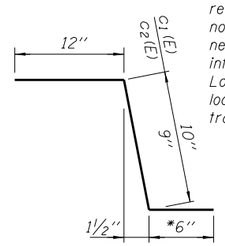

BARS c_1(E) & c_2(E)

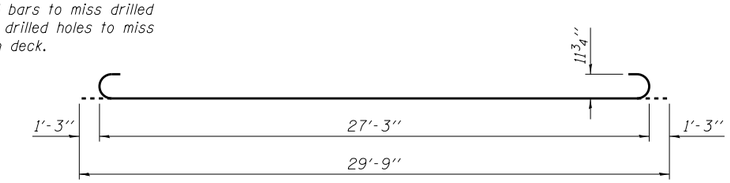

BAR b_{12} (E)

TWO APPROACHES BILL OF MATERIAL

Bar	No.	Size	Length	Shape
a_{11} (E)	100	#4	22'-8"	
a_{12} (E)	184	#5	23'-0"	
a_{13} (E)	50	#4	22'-9"	
a_{14} (E)	92	#5	22'-9"	
a_{15} (E)	50	#4	14'-6"	
a_{16} (E)	92	#5	14'-6"	
b_{11} (E)	132	#4	29'-8"	
b_{12} (E)	390	#9	29'-9"	
b_{13} (E)	44	#5	31'-2"	
c_1 (E)	62	#5	2'-4"	
c_2 (E)	62	#5	2'-3"	
c_{11} (E)	124	#5	9'-6"	
t_{11} (E)	332	#4	9'-8"	
w_{11} (E)	160	#5	23'-0"	
w_{12} (E)	80	#5	22'-9"	
w_{13} (E)	80	#5	14'-6"	
Concrete Structures			Cu. Yd.	50.0
Concrete Superstructure			Cu. Yd.	263.5
Reinforcement Bars, Epoxy Coated			Pound	64,860

GRÄEF
8501 W. Higgins Road; Suite 280
Chicago, Illinois 60631; (773) 399-0112

USER NAME =	DESIGNED - J.Z.	REVISED -
	CHECKED - J.A.Z.	REVISED -
PLOT SCALE =	DRAWN - E.E.J.	REVISED -
PLOT DATE =	DATE - 5/17/2013	REVISED -

STATE OF ILLINOIS
DEPARTMENT OF TRANSPORTATION

BRIDGE APPROACH SLAB DETAILS
STRUCTURE NO. 016-1149

SHEET NO. S21 OF 50 SHEETS

F.A.I. RTE.	SECTION	COUNTY	TOTAL SHEETS	SHEET NO.
94	1920-B	COOK	137	80

CONTRACT NO. 60J15

ILLINOIS FED. AID PROJECT

H:\Jobs2011\2011302\CAD\Structural\dgn\016-1149_Final\00\D160J15-s21-appr-sc.dgn
5/20/2013 11:24:06 AM

All steel rail elements shall be galvanized according to Article 509.05 of the Standard Specifications.

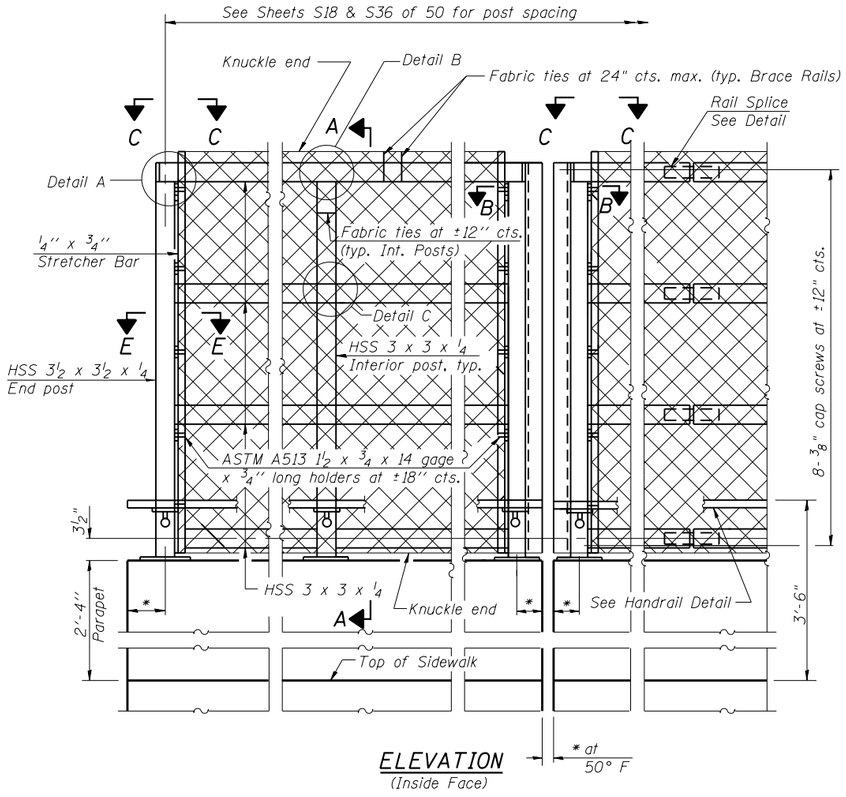

ELEVATION
(Inside Face)

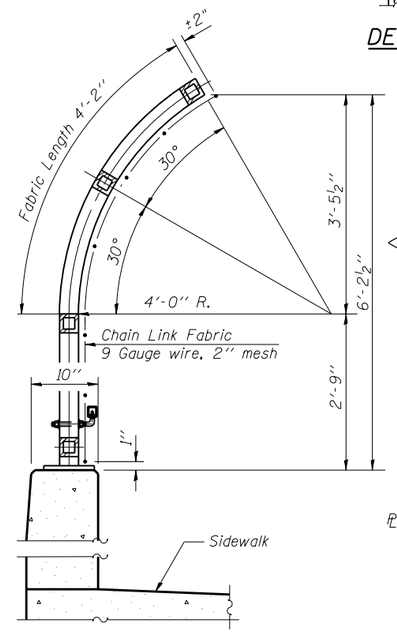

SECTION A-A

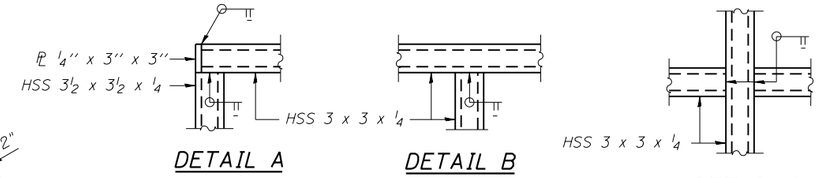

DETAIL A DETAIL B DETAIL C

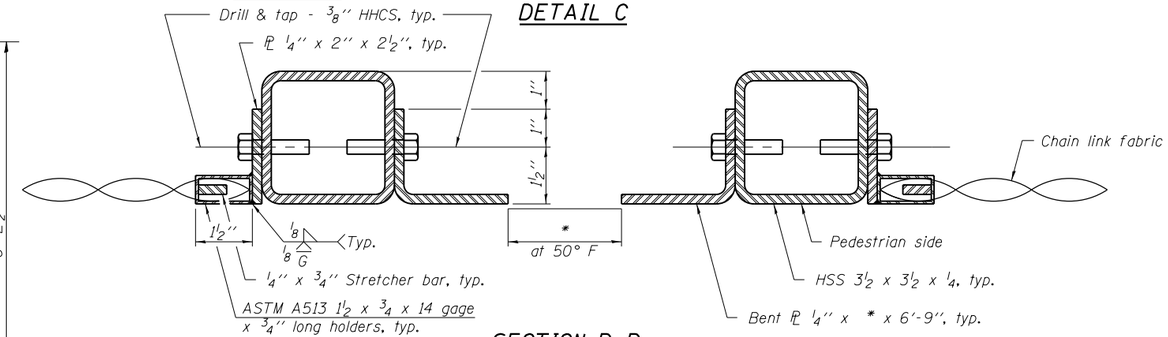

SECTION B-B
(At Expansion Joint)

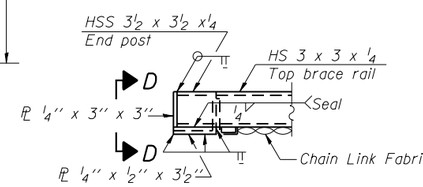

VIEW C-C

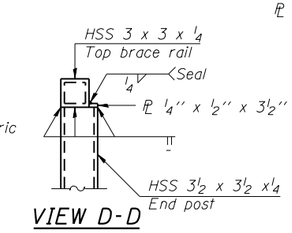

VIEW D-D

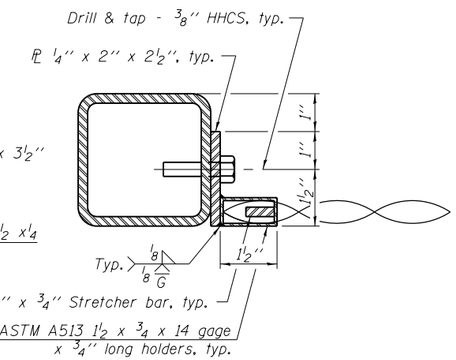

SECTION E-E

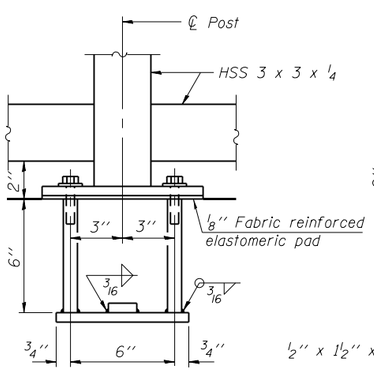

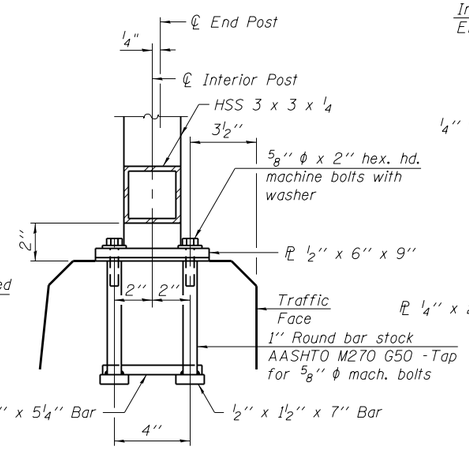

ANCHOR BOLT DETAILS

In lieu of the cast-in-place anchor device shown, the Contractor has the option of drilling and setting 5/8" ϕ anchor rods according to Article 509.06 of the Standard Specifications. Embedment shall be according to the manufacturer's specifications.

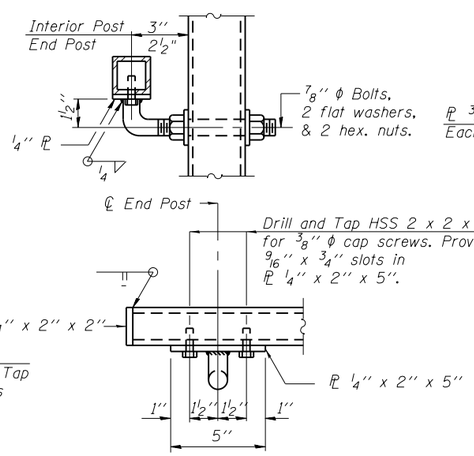

HANDRAIL DETAIL

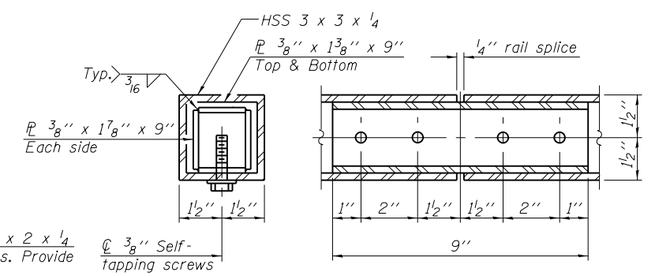

RAIL SPLICE

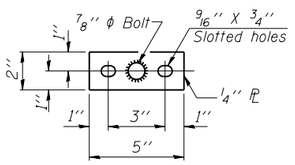

BASE PL
(Handrail)

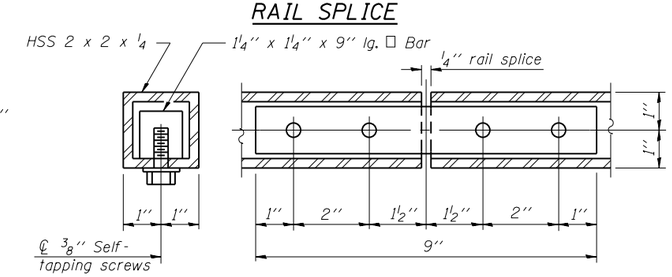

HANDRAIL SPLICE

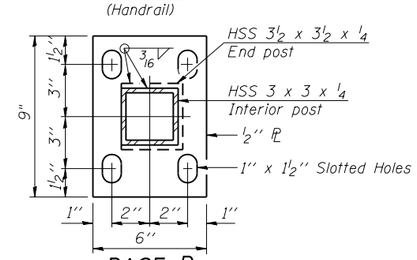

BASE PL

BILL OF MATERIAL

Item	Unit	Quantity
Bridge Fence Railing	Foot	755

*Variable - See Plans
(10'-0" Maximum Post Spacing)

R-32 7-1-10

H:\Jobs20\20I3022\CAD\Structural\dgn\016-1149_Final\00\D160J15-s22-railing.dgn
5/20/2013 11:24:06 AM

GRAEF
8501 W. Higgins Road; Suite 280
Chicago, Illinois 60631; (773) 399-0112

USER NAME =	DESIGNED - J.Z.	REVISED -	
	CHECKED - J.A.Z.	REVISED -	
PLOT SCALE =	DRAWN - E.E.J.	REVISED -	
PLOT DATE =	DATE - 5/17/2013	REVISED -	

STATE OF ILLINOIS
DEPARTMENT OF TRANSPORTATION

BRIDGE FENCE RAILING, PARAPET MOUNTED
STRUCTURE NO. 016-1149

SHEET NO. S22 OF 50 SHEETS

F.A.I. RTE.	SECTION	COUNTY	TOTAL SHEETS	SHEET NO.
94	1920-B	COOK	137	81
		CONTRACT NO. 60J15		
		ILLINOIS FED. AID PROJECT		

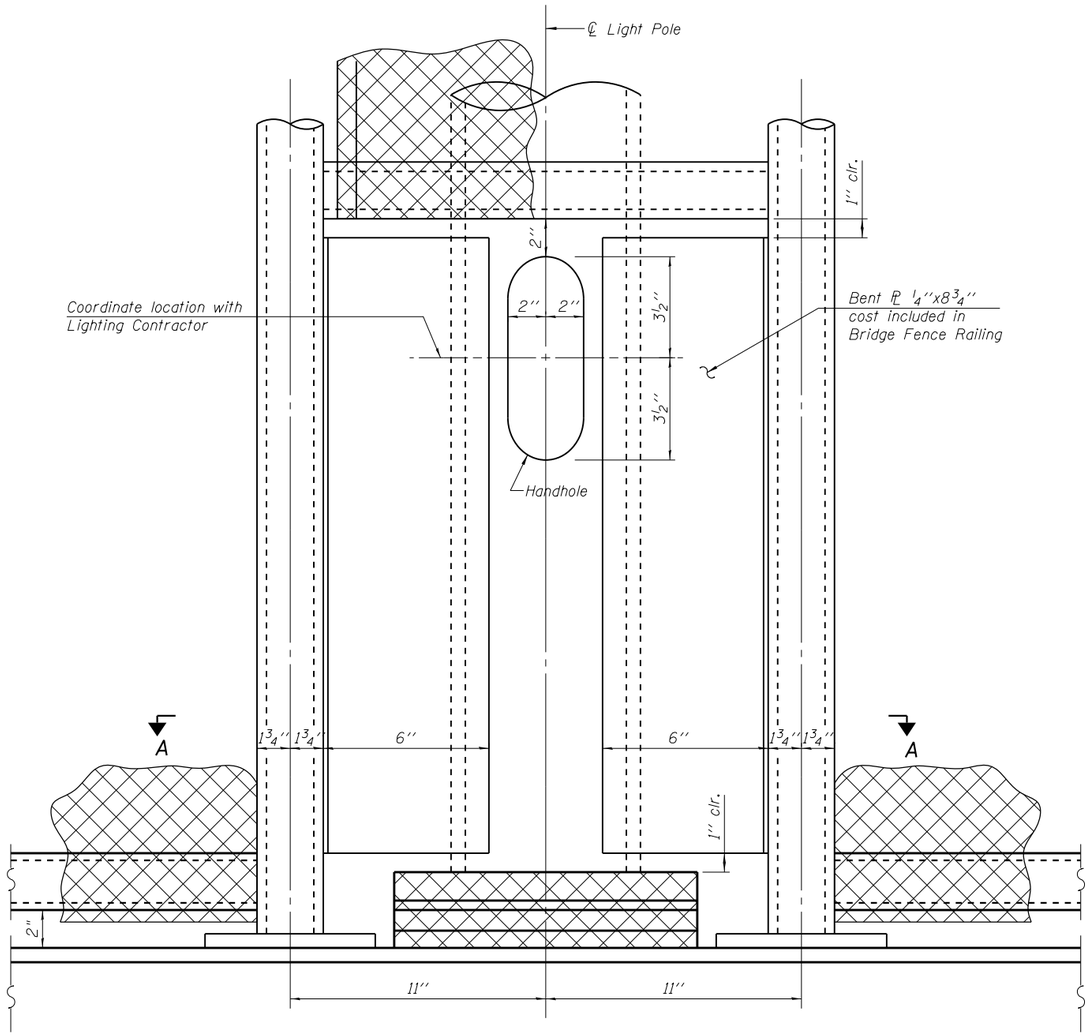

ELEVATION AT LIGHT POLE

(Inside Face)

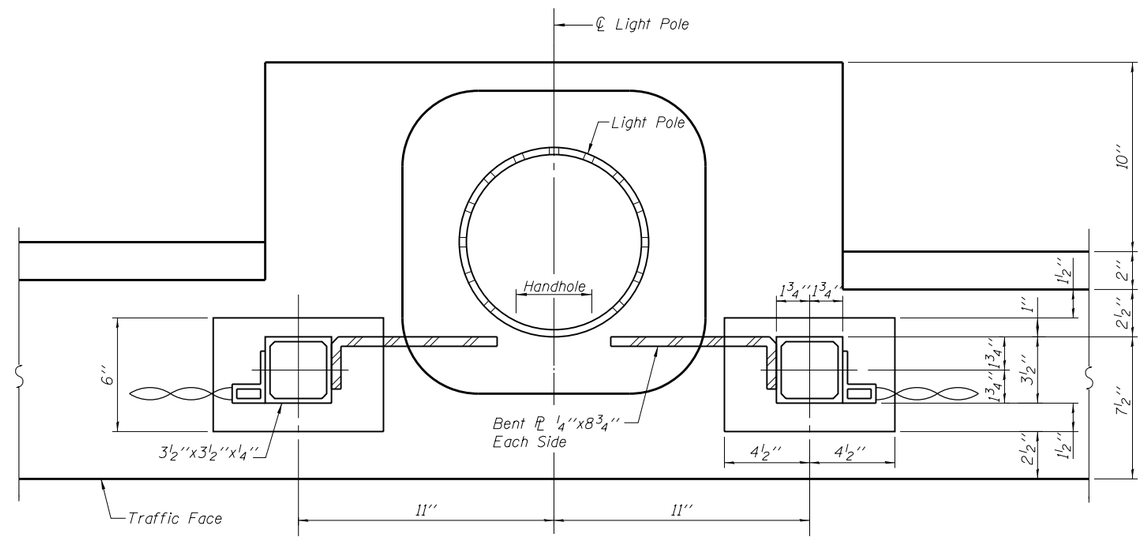

SECTION A-A

NOTES

1. Work this sheet with sheets S18, S22 and S36.

H:\Jobs2011\2013022\CAD\Structural\dgn\016-1149_Final\00\D160J15-s23-railing-dt.dgn
5/20/2013 11:24:07 AM

GRAEF
8501 W. Higgins Road; Suite 280
Chicago, Illinois 60631; (773) 399-0112

USER NAME =	DESIGNED - J.Z.	REVISED -
	CHECKED - J.A.Z.	REVISED -
PLOT SCALE =	DRAWN - E.E.J.	REVISED -
PLOT DATE =	DATE - 5/17/2013	REVISED -

STATE OF ILLINOIS
DEPARTMENT OF TRANSPORTATION

BRIDGE FENCE RAILING DETAILS
STRUCTURE NO. 016-1149

SHEET NO. S23 OF 50 SHEETS

F.A.I. RTE.	SECTION	COUNTY	TOTAL SHEETS	SHEET NO.
94	1920-B	COOK	137	82
		CONTRACT NO. 60J15		
		ILLINOIS FED. AID PROJECT		

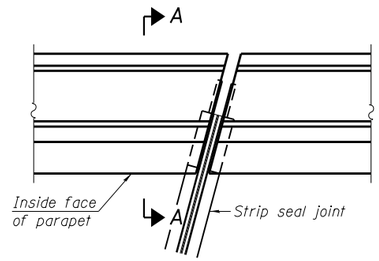

PLAN
(For skews ≤ 30°)

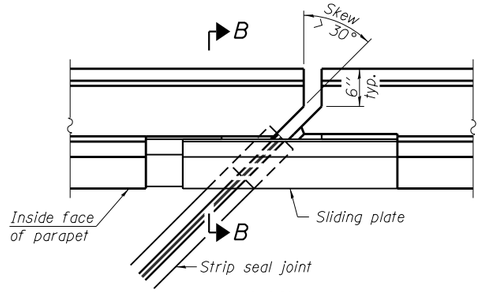

PLAN
(For skews > 30°)
Showing point block

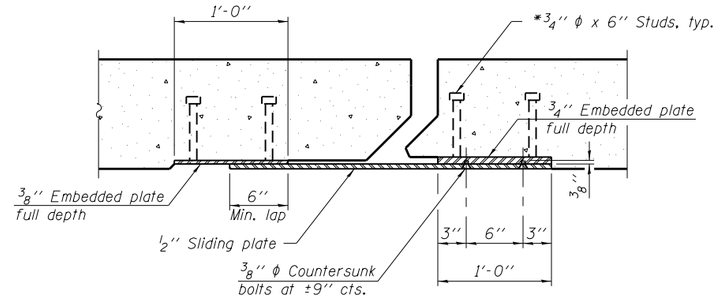

SECTION C-C

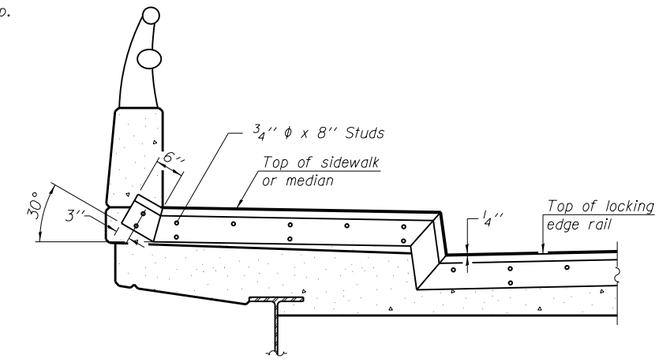

TYPICAL END TREATMENT AT SIDEWALK OR MEDIAN

Shorter plates with a single row of studs at 12'' cts. may be necessary on medians which are shallower than 9''. See manufacturer's recommendation.

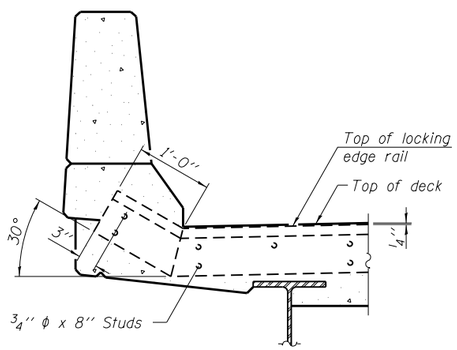

SECTION A-A

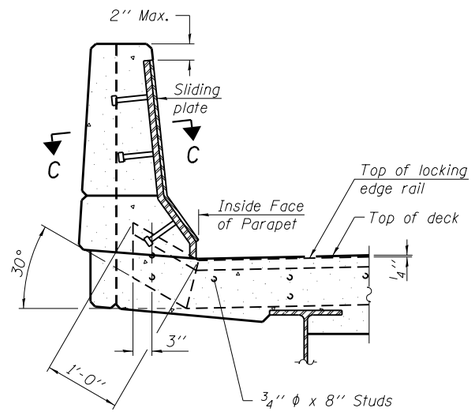

SECTION B-B

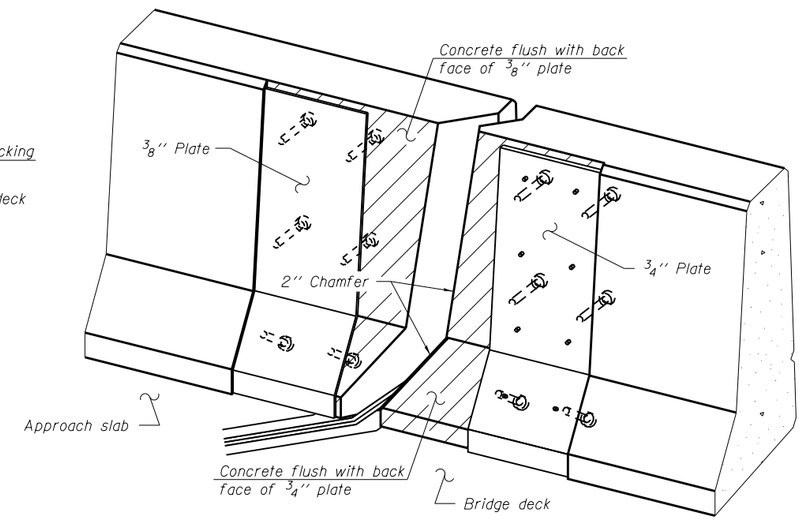

TRIMETRIC VIEW
(Showing back plates only)

Notes:

The strip seal shall be made continuous and shall have a minimum thickness of 1/4''. The configuration of the strip seal shall match the configuration of the Locking Edge Rails. Open or "webbed" strip seal gland configurations are not permitted. The gland shall be sized for a maximum rated movement of 4 inches.

The Locking Edge Rails depicted are conceptual only, except for the minimum dimensions shown. The actual configuration of the Locking Edge Rails and matching strip seal may vary from manufacturer to manufacturer. Flanged edge rails will not be allowed. Locking Edge Rails may be spliced at slope discontinuities.

The manufacturer's recommended installation methods shall be followed.

The joint opening and deck dimensions detailed on the superstructure are based on a rolled rail expansion joint. If the Contractor elects to use the welded rail expansion joint, the opening and deck dimensions shall be modified according to the dimensions detailed on this sheet. Required modifications shall be made at no additional cost to the State.

All steel components shall be galvanized after fabrication according to Article 520.03 of the Standard Specifications.

Maximum space between rail segments shall be 3/16'', sealed with a suitable sealant. Joints in rails within 10 ft. of curbs shall be welded.

Parapet plates and anchorage studs for skews > 30° included in the cost of Preformed Joint Strip Seal.

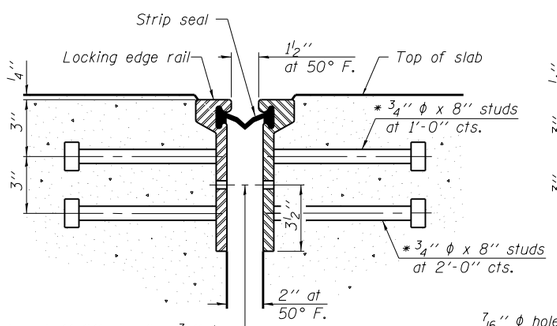

SECTION THRU
ROLLED RAIL JOINT

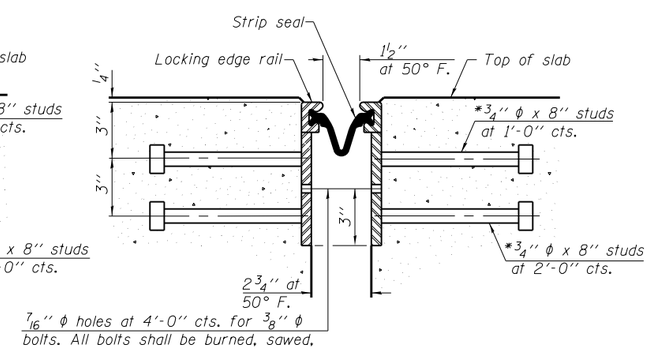

SECTION THRU
WELDED RAIL JOINT

* Granular or solid flux filled headed studs conforming to Article 1006.32 of the Std. Specs., automatically end welded.

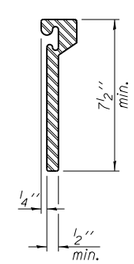

ROLLED
EXTRUDED RAIL

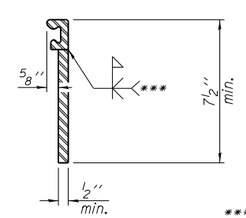

WELDED RAIL

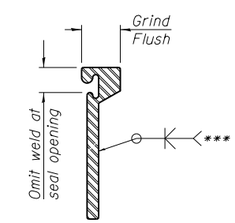

*** Back gouge not required if complete joint penetration is verified by mock-up.

LOCKING EDGE
RAIL SPLICE

The inside of the locking edge rail groove shall be free of weld residue.

Rolled rail shown, welded rail similar.

BILL OF MATERIAL

Item	Unit	Total
Preformed Joint Strip Seal	Foot	167

LOCKING EDGE RAILS

EJ-SSJ 1-27-12

H:\Jobs20\20I3022\CAD\Structural\dgn\016-1149_Final\00\D160J15-s24-strip-seal.dgn
5/20/2013 11:24:07 AM

GRAEF
8501 W. Higgins Road; Suite 280
Chicago, Illinois 60631; (773) 399-0112

USER NAME =	DESIGNED - J.Z.	REVISED -	
	CHECKED - J.A.Z.	REVISED -	
PLOT SCALE =	DRAWN - E.E.J.	REVISED -	
PLOT DATE =	DATE - 5/17/2013	REVISED -	

STATE OF ILLINOIS
DEPARTMENT OF TRANSPORTATION

PREFORMED JOINT STRIP SEAL
STRUCTURE NO. 016-1149

SHEET NO. S24 OF 50 SHEETS

F.A.I. RTE.	SECTION	COUNTY	TOTAL SHEETS	SHEET NO.
94	1920-B	COOK	137	83
		CONTRACT NO. 60J15		
	ILLINOIS FED. AID PROJECT			

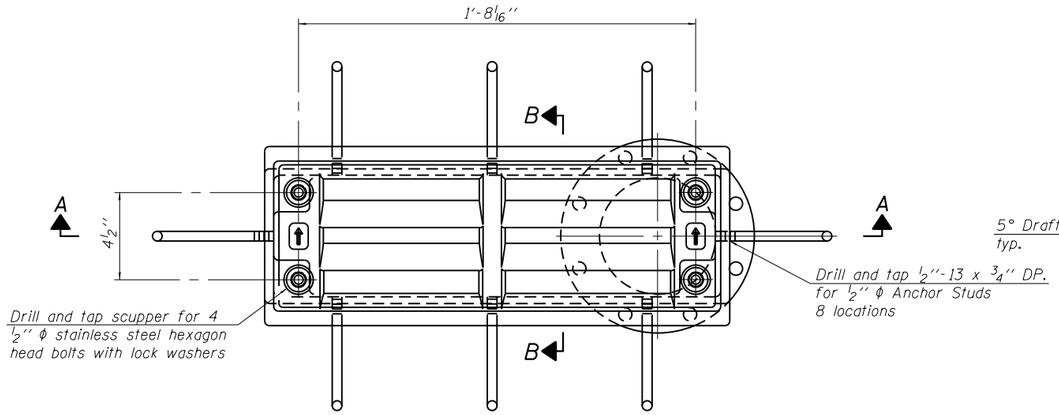

PLAN

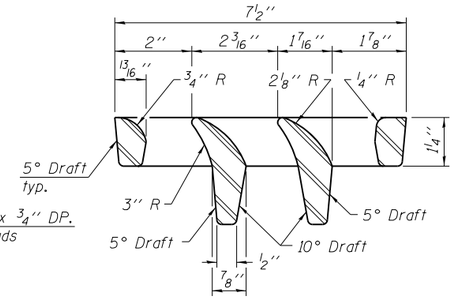

VANE GRATE DETAIL

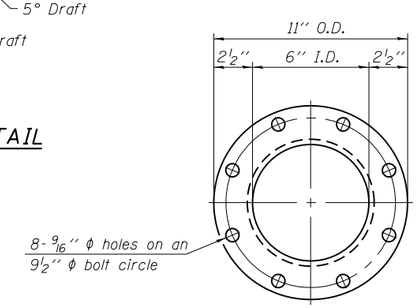

Notes:

All cast iron parts shall be gray iron conforming to the requirements of AASHTO M 105, Class 35B.

Bolts, anchor studs, washers and nuts shall conform to the requirements of ASTM A 307 and shall be galvanized according to AASHTO M 232.

Downspouts located on the exterior side of a painted steel fascia beam shall be painted with the finish coat specified for the exterior side of the fascia beam.

As an alternate, bolts, anchor studs, washers and nuts may be stainless steel according to Article 1006.29(d) of the Standard Specifications.

Structural steel weldments of equal sections and of the same configuration may be substituted for the cast iron scupper frame. Fillet or full penetration welds shall be used for the weldments. Details shall be submitted to the Engineer for approval. Structural steel weldments shall not be substituted for the cast iron scupper grate. Structural steel frames and downspouts shall be galvanized according to AASHTO M111.

The Contractor shall take appropriate measures to assure that Protective Coat is not applied to the scupper.

Cost of the Grate, Frame, Downspout, Anchor Studs, Bolts, Washers and Nuts including complete installation of the scupper shall be paid for at the contract unit price each for Drainage Scuppers, DS-12.

Alternate fiberglass downspout conforming to ASTM D 2996 with a short-time rupture strength hoop tensile stress of 30,000 psi min. may be used in lieu of the cast iron or steel equivalent.

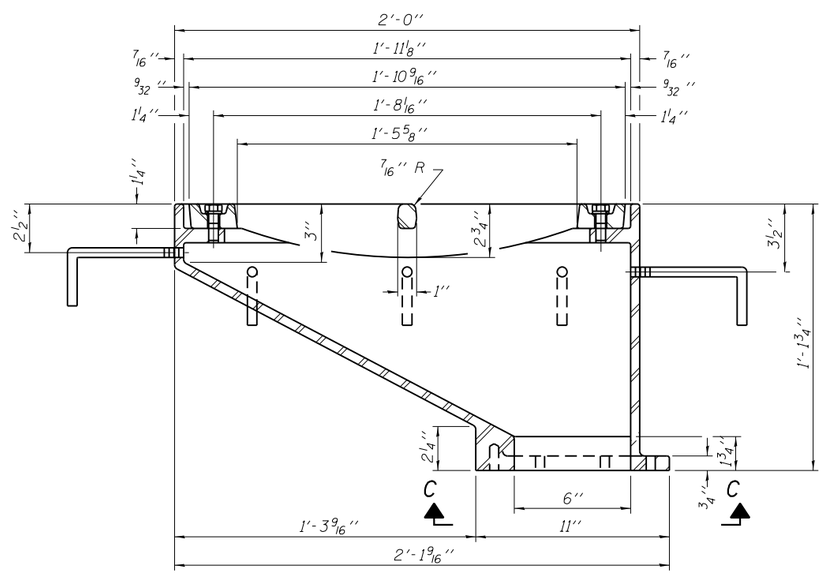

SECTION A-A

See sheet S15 & S16 of 50 for scupper location relative to parapet.

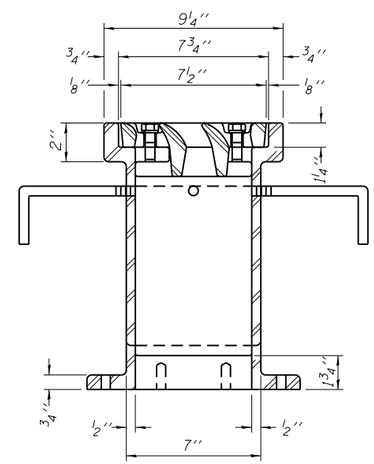

SECTION B-B

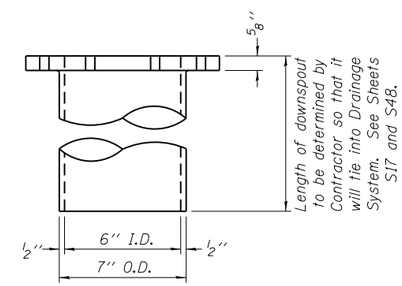

DOWNSPOUT

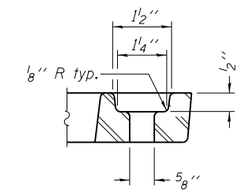

BOLT HOLE DETAIL

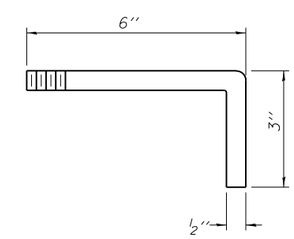

ANCHOR STUD DETAIL

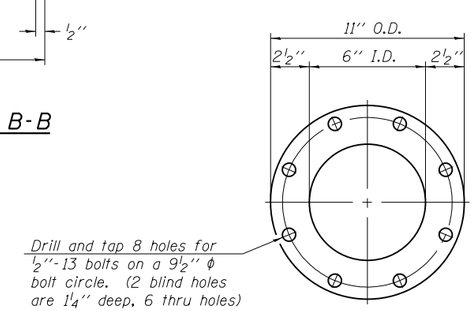

VIEW C-C

BILL OF MATERIAL

ITEM	UNIT	QUANTITY
Drainage Scuppers, DS-12	Each	4

DS-12 7-1-10

H:\Jobs2011\2013022\CAD\Structural\dgn\016-1149_Final\00\D160J15-s25-scupper.dgn
5/20/2013 11:24:08 AM

GRÄEF
8501 W. Higgins Road; Suite 280
Chicago, Illinois 60631; (773) 399-0112

USER NAME =	DESIGNED - J.Z.	REVISED -
	CHECKED - J.A.Z.	REVISED -
PLOT SCALE =	DRAWN - E.E.J.	REVISED -
PLOT DATE =	DATE - 5/17/2013	REVISED -

STATE OF ILLINOIS
DEPARTMENT OF TRANSPORTATION

DRAINAGE SCUPPER, DS-12
STRUCTURE NO. 016-1149

SHEET NO. S25 OF 50 SHEETS

F.A.I. RTE.	SECTION	COUNTY	TOTAL SHEETS	SHEET NO.
94	1920-B	COOK	137	84
		CONTRACT NO. 60J15		
		ILLINOIS FED. AID PROJECT		

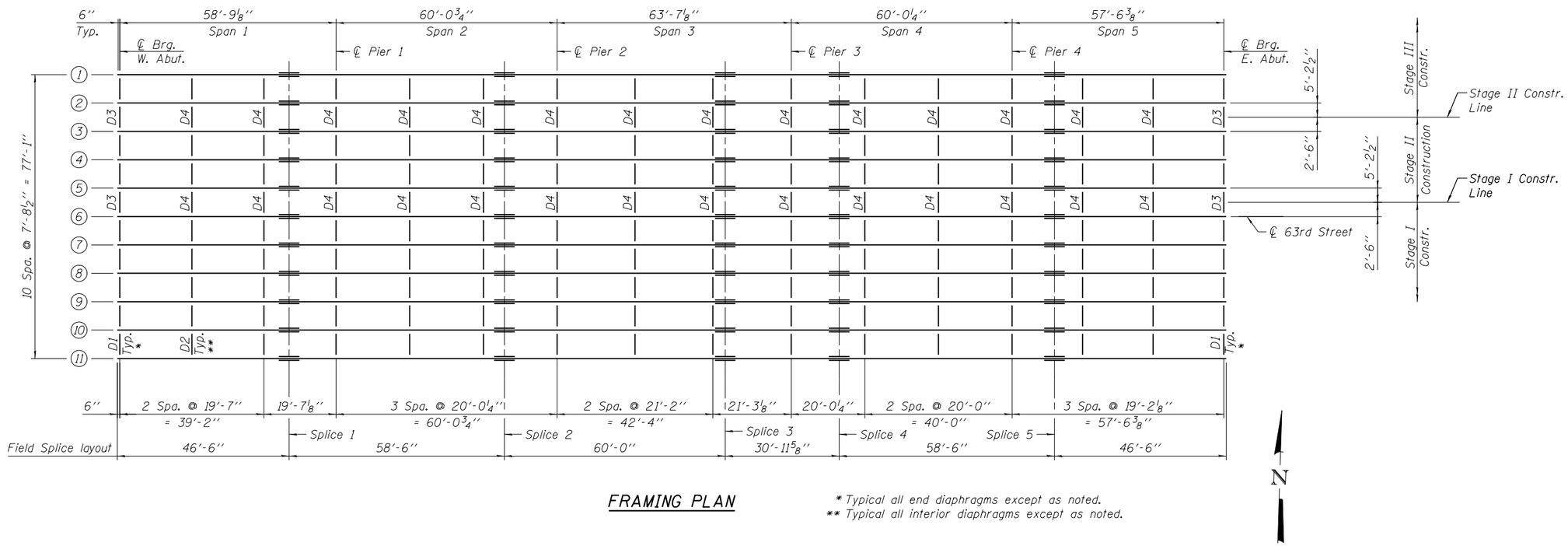

FRAMING PLAN

* Typical all end diaphragms except as noted.
** Typical all interior diaphragms except as noted.

Top of Beam Elevations
(For Fabrication only)

	BEAM 1	BEAM 2	BEAM 3	BEAM 4	BEAM 5	BEAM 6	BEAM 7	BEAM 8	BEAM 9	BEAM 10	BEAM 11
CL. Brg. W. Abut.	600.44	600.44	600.56	600.67	600.79	600.91	600.79	600.67	600.56	600.44	600.44
Splice #1	601.39	601.39	601.51	601.62	601.74	601.85	601.74	601.62	601.51	601.39	601.39
CL. Brg. Pier 1	601.53	601.53	601.64	601.76	601.87	601.99	601.87	601.76	601.64	601.53	601.53
Splice #2	602.02	602.02	602.13	602.25	602.37	602.48	602.37	602.25	602.13	602.02	602.02
CL. Brg. Pier 2	601.99	601.99	602.11	602.22	602.34	602.46	602.34	602.22	602.11	601.99	601.99
Splice #3	601.91	601.91	602.03	602.14	602.26	602.37	602.26	602.14	602.03	601.91	601.91
CL. Brg. Pier 3	601.72	601.72	601.84	601.95	602.07	602.18	602.07	601.95	601.84	601.72	601.72
Splice #4	601.58	601.58	601.70	601.81	601.93	602.04	601.93	601.81	601.70	601.58	601.58
CL. Brg. Pier 4	600.85	600.85	600.97	601.09	601.20	601.32	601.20	601.09	600.97	600.85	600.85
Splice #5	600.68	600.68	600.79	600.91	601.02	601.14	601.02	600.91	600.79	600.68	600.68
CL. Brg. E. Abut.	600.02	600.02	600.14	600.25	600.37	600.49	600.37	600.25	600.14	600.02	600.02

NOTES

1. Work this sheet with Sheets S27 and S28.
2. All diaphragms shall be installed as steel is erected and secured with erection pins and bolts except as otherwise noted. Individual diaphragms at supports may be temporarily disconnected to install bearing anchor rods.

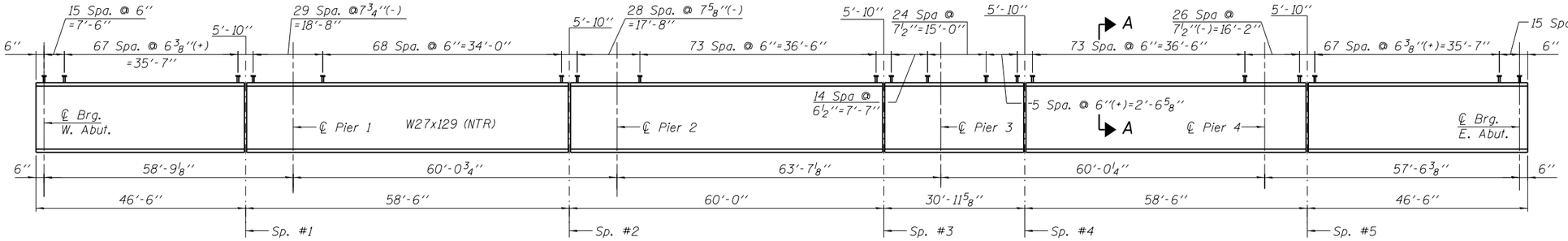

BEAM ELEVATION

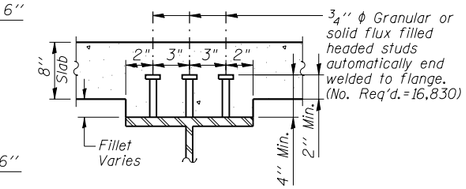

SECTION A-A

INTERIOR BEAM MOMENT TABLE										
		0.4 Sp. 1	Pier 1	0.5 Sp. 2	Pier 2	0.5 Sp. 3	Pier 3	0.5 Sp. 4	Pier 4	0.6 Sp. 5
I_s	(in^4)	4,760	4,760	4,760	4,760	4,760	4,760	4,760	4,760	4,760
I_c (n)	(in^4)	13,629	-	13,629	-	13,629	-	13,629	-	13,629
I_c (3n)	(in^4)	10,212	-	10,212	-	10,212	-	10,212	-	10,212
I_c (cr)	(in^4)	-	6,886	-	6,886	-	6,886	-	6,886	-
S_s	(in^3)	345	345	345	345	345	345	345	345	345
S_c (n)	(in^3)	517.60	-	517.60	-	517.60	-	517.60	-	517.60
S_c (3n)	(in^3)	470.40	-	470.40	-	470.40	-	470.40	-	470.40
S_c (cr)	(in^3)	-	406.60	-	406.60	-	406.60	-	406.60	-
DC1	(k/')	0.945	0.945	0.945	0.945	0.945	0.945	0.945	0.945	0.945
M_{DC1}	('k)	255	338	110	289	186	2.92	114	328	243
DC2	(k/')	0.52	0.52	0.52	0.52	0.52	0.52	0.52	0.52	0.52
M_{DC2}	('k)	140	189	59	161	101	163	61	183	133
DW	(k/')	0.28	0.28	0.28	0.28	0.28	0.28	0.28	0.28	0.28
M_{DW}	('k)	75	102	32	87	54	88	33	99	72
M_{LL+IM}	('k)	635	517	521	505	551	505	520	510	621
M_u (Strength I)	('k)	1,719	1,715	1,172	1,577	1,403	1,584	1,177	1,680	1,600
$\phi_f M_n$	('k)	2,559	1,988	2,674	2,020	2,626	2,015	2,674	1,998	2,588
f_s DC1	(ksi)	8.87	11.77	1.51	10.06	6.46	10.17	3.95	11.43	8.44
f_s DC2	(ksi)	3.57	3.59	2.00	3.07	2.57	3.11	1.55	3.49	3.39
f_s DW	(ksi)	1.92	1.94	0.81	1.66	1.40	1.67	0.84	1.88	1.83
f_s (LL+IM)	(ksi)	14.40	14.93	11.81	14.60	12.47	14.59	11.78	14.74	14.07
f_s (Service II)	(ksi)	33.52	40.21	21.86	36.80	27.01	36.98	22.01	39.35	32.37
$0.95R_hF_{yf}$	(ksi)	47.50	47.50	47.50	47.50	47.50	47.50	47.50	47.50	47.50
fs (Total)(Strength I)	(ksi)	44.20	43.20	29.50	48.50	35.70	48.70	29.70	42.10	42.70
$\phi_f F_n$	(ksi)	50	50	50	50	50	50	50	50	50
V_f	(k)	21.37	33.63	21.45	35.83	21.55	34.85	21.45	35.47	21.46

INTERIOR BEAM REACTION TABLE							
		W. Abut.	Pier 1	Pier 2	Pier 3	Pier 4	E. Abut.
R_{DC1}	(k)	24.21	62.54	57.37	57.69	61.68	23.66
R_{DC2}	(k)	12.07	34.54	31.65	31.83	34.07	11.77
R_{DW}	(k)	6.50	18.60	17.04	17.14	18.34	6.34
R_{LL+IM}	(k)	74.61	109.80	108.95	108.97	109.19	74.08
R_{Total}	(k)	117.39	225.47	215.02	215.64	223.28	114.46

NOTES

1. The W27 beams and the splice plates for the W27 beams shall be AASHTO M270 Grade 50.

2. Load carrying components designated "NTR" shall conform to the Impact Testing Requirement, Zone 2.

BILL OF MATERIAL

Item	Unit	Total
Stud Shear Connectors	Each	16,830

I_s, S_s: Non-composite moment of inertia and section modulus of the steel section used for computing f_s (Total-Strength I, and Service II) due to non-composite dead loads ($in.^4$ and $in.^3$).

$I_c(n)$, $S_c(n)$: Composite moment of inertia and section modulus of the steel and deck based upon the modular ratio, "n", used for computing f_s (Total-Strength I, and Service II) in uncracked sections due to short-term composite live loads ($in.^4$ and $in.^3$).

$I_c(3n)$, $S_c(3n)$: Composite moment of inertia and section modulus of the steel and deck based upon 3 times the modular ratio, "3n", used for computing f_s (Total-Strength I, and Service II) in uncracked sections, due to long-term composite (superimposed) dead loads ($in.^4$ and $in.^3$).

$I_c(cr)$, $S_c(cr)$: Composite moment of inertia and section modulus of the steel and longitudinal deck reinforcement, used for computing f_s (Total-Strength I and Service II) in cracked sections, due to both short-term composite live loads and long-term composite (superimposed) dead loads ($in.^4$ and $in.^3$).

DC1: Un-factored non-composite dead load (kips/ft.).

M_{DC1}: Un-factored moment due to non-composite dead load (kip-ft.).

DC2: Un-factored long-term composite (superimposed excluding future wearing surface) dead load (kips/ft.).

M_{DC2}: Un-factored moment due to long-term composite (superimposed excluding future wearing surface) dead load (kip-ft.).

DW: Un-factored long-term composite (superimposed future wearing surface only) dead load (kips/ft.).

M_{DW}: Un-factored moment due to long-term composite (superimposed future wearing surface only) dead load (kip-ft.).

M_{LL+IM}: Un-factored live load moment plus dynamic load allowance (impact) (kip-ft.).

M_u (Strength I): Factored design moment (kip-ft.).
$1.25\ (M_{DC1} + M_{DC2}) + 1.5\ M_{DW} + 1.75\ M_{LL+IM}$

$\phi_f M_n$: Compact composite positive moment capacity computed according to Article 6.10.7.1 or non-slender negative moment capacity according to Article A6.1.1 or A6.1.2 (kip-ft).

f_s DC1: Un-factored stress at edge of flange for controlling steel flange due to vertical non-composite dead loads as calculated below (ksi).
M_{DC1} / S_{nc}

f_s DC2: Un-factored stress at edge of flange for controlling steel flange due to vertical composite dead loads as calculated below (ksi).
$M_{DC2} / S_c(3n)$ or $M_{DC2} / S_c(cr)$ as applicable.

f_s DW: Un-factored stress at edge of flange for controlling steel flange due to vertical composite future wearing surface loads as calculated below (ksi).
$M_{DW} / S_c(3n)$ or $M_{DW} / S_c(cr)$ as applicable.

f_s (LL+IM): Un-factored stress at edge of flange for controlling steel flange due to vertical composite live load plus impact loads as calculated below (ksi).
$M_{LL+IM} / S_c(n)$ or $M_{DW} / S_c(cr)$ as applicable.

f_s (Service II): Sum of stresses as computed below (ksi).
$f_{sDC1} + f_{sDC2} + f_{sDW} + 1.3\ f_s(LL+IM)$

$0.95R_hF_{yf}$: Composite stress capacity for Service II loading according to Article 6.10.4.2 (ksi).

f_s (Total)(Strength I): Sum of stresses as computed below on non-compact section (ksi).
$1.25\ (f_{sDC1} + f_{sDC2}) + 1.5\ f_{sDW} + 1.75\ f_s(LL+IM)$

$\phi_f F_n$: Non-Compact composite positive or negative stress capacity for Strength I loading according to Article 6.10.7 or 6.10.8 (ksi).

V_f: Maximum factored shear range in span computed according to Article 6.10.10.

H:\Jobs2011\2013022\CAD\Structural\dgn\016-1149_Final\00\D160J15-s27-beam-dt.dgn
5/20/2013 11:24:08 AM

GRAEF
8501 W. Higgins Road; Suite 280
Chicago, Illinois 60631; (773) 399-0112

USER NAME =	DESIGNED - J.Z.	REVISED -	
	CHECKED - J.A.Z.	REVISED -	
PLOT SCALE =	DRAWN - E.E.J.	REVISED -	
PLOT DATE =	DATE - 5/17/2013	REVISED -	

STATE OF ILLINOIS
DEPARTMENT OF TRANSPORTATION

BEAM DETAILS
STRUCTURE NO. 016-1149
SHEET NO. S27 OF 50 SHEETS

F.A.I. RTE.	SECTION	COUNTY	TOTAL SHEETS	SHEET NO.
94	1920-B	COOK	137	86
		CONTRACT NO. 60J15		
		ILLINOIS FED. AID PROJECT		

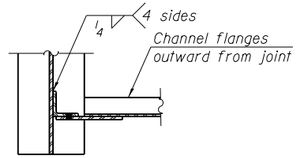

SECTION B-B

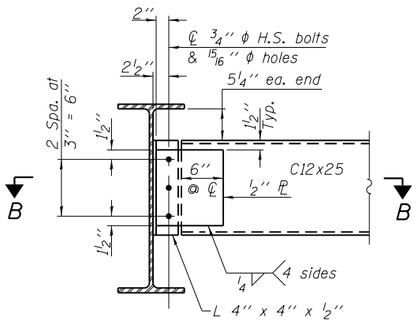

END DIAPHRAGM-D1

(16 Required)

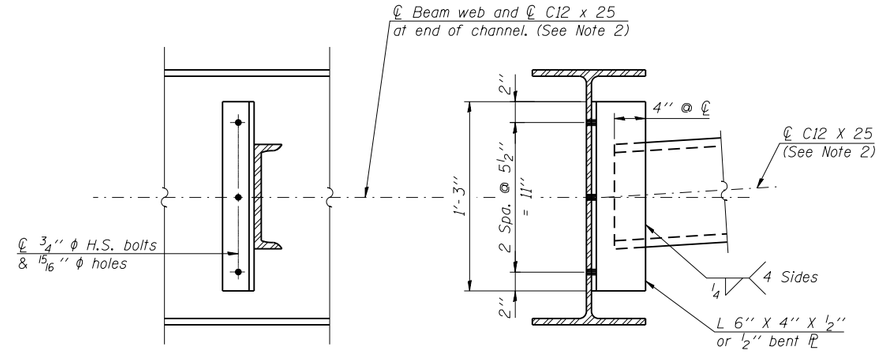

INTERIOR DIAPHRAGM - D2

(112 Required)

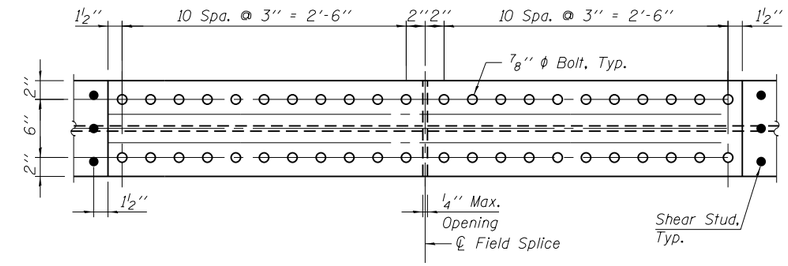

FLANGE SPLICE PLATE

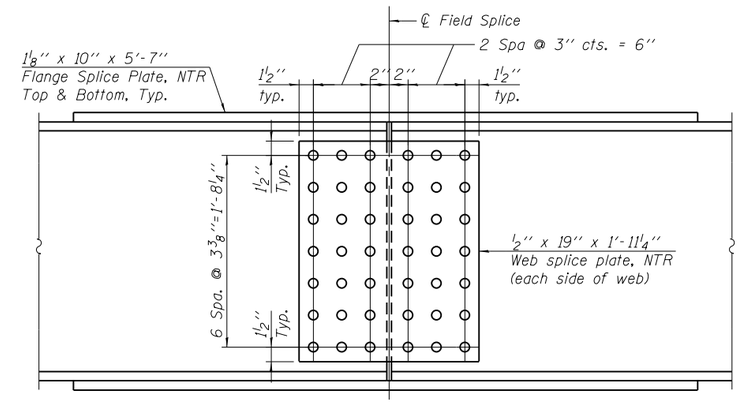

WEB SPLICE PLATE

SPLICE DETAILS

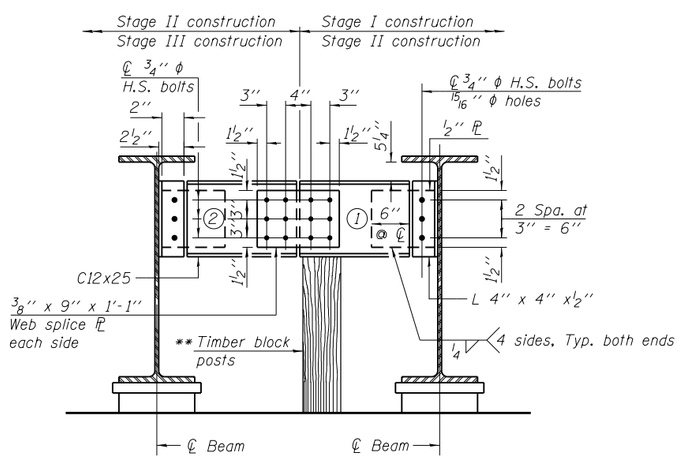

** Cost of Timber Block Posts is included with Structural Steel.

END DIAPHRAGM-D3

(4 Required)

℄ of 3/4'' ϕ H.S. bolts, 15/16'' ϕ holes at Beam 6 end of bracing and 13/16'' x 1 7/8'' standard long-slotted vertical holes at Beam 5 member connection plate. At Beam 5, locate slotted holes such that at final condition, bolts are at bottom of slots.
The bolts for the slotted holes shall only be finger tightened prior to the deck pouring and to be fully tightened after completion of the pouring for Stage II Construction.

℄ of 3/4'' ϕ H.S. bolts, 15/16'' ϕ holes at Beam 3 end of bracing and 13/16'' x 1 7/8'' standard long-slotted vertical holes at Beam 2 member connection plate. At Beam 2, locate slotted holes such that at final condition, bolts are at bottom of slots.
The bolts for the slotted holes shall only be finger tightened prior to the deck pouring and to be fully tightened after completion of the pouring for Stage III Construction.

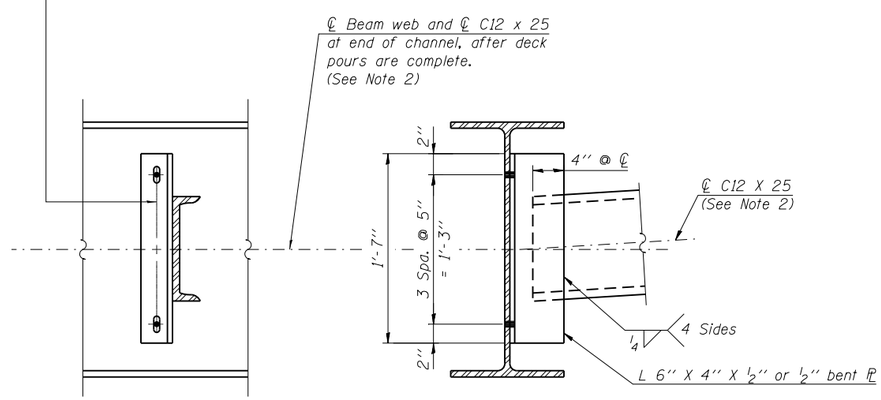

INTERIOR DIAPHRAGM - D4

(28 Required)

END DIAPHRAGM STAGE CONSTRUCTION SEQUENCE

1.) Order diaphragm in two sections.
2.) Attach section 1 of diaphragm to beam
3.) Place timber block posts between section 1 of diaphragm and abutment bearing section.
4.) Attach section 2 of diaphragm to both beam and section 1 of diaphragm during stage II or stage III construction with splice plates.
5.) Remove timber block posts.

NOTES

1. Two hardened washers are required for each set of oversized holes.
2. Alternate C12x30 diaphragm channels are permitted for D2 and D4 diaphragms to facilitate material acquisition. Calculated weight of structural steel is based on C12x25. The alternate, if utilized, shall be provided at no extra cost to the Department.
3. The W27 beams and the splice plates for the W27 beams shall be AASHTO M270 Grade 50.

H:\Jobs20II\20II3022\CAD\Structural\dgn\016-II49_Final\00\DI60J15-s28-splice-dt.dgn
5/20/2013 11:24:09 AM

GRAEF
8501 W. Higgins Road; Suite 280
Chicago, Illinois 60631; (773) 399-0112

USER NAME =	DESIGNED - J.Z.	REVISED -	
	CHECKED - J.A.Z.	REVISED -	
PLOT SCALE =	DRAWN - E.E.J.	REVISED -	
PLOT DATE =	DATE - 5/17/2013	REVISED -	

STATE OF ILLINOIS
DEPARTMENT OF TRANSPORTATION

FIELD SPLICE DETAILS
STRUCTURE NO. 016-1149
SHEET NO. S28 OF 50 SHEETS

F.A.I. RTE.	SECTION	COUNTY	TOTAL SHEETS	SHEET NO.
94	1920-B	COOK	137	87

CONTRACT NO. 60J15
ILLINOIS FED. AID PROJECT

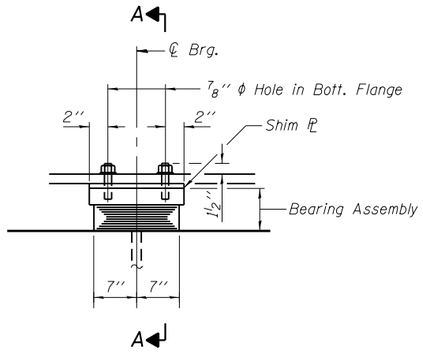

ELEVATION

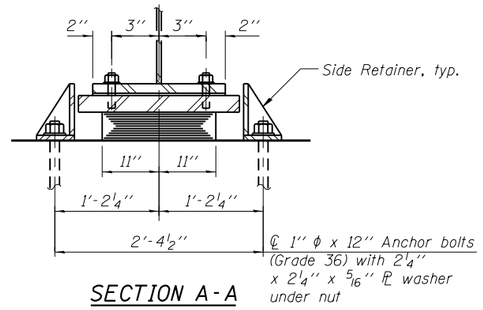

SECTION A-A

TYPE I ELASTOMERIC EXP. BRG. AT PIERS 1 & 4

(22 Required)

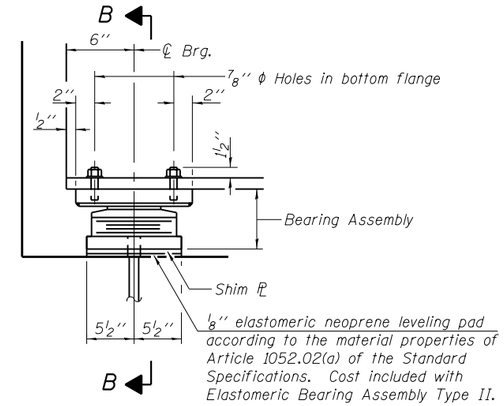

ELEVATION

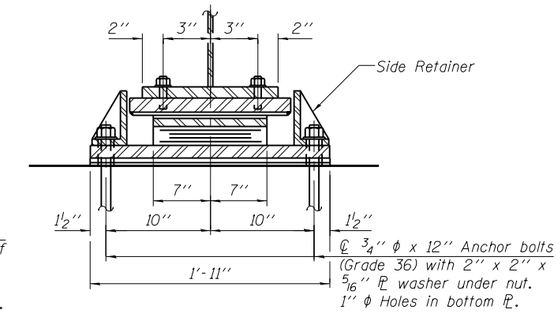

SECTION B-B

TYPE II ELASTOMERIC EXP. BRG. AT ABUT.

(22 Required)

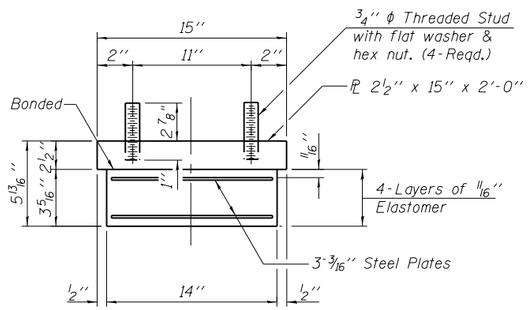

BEARING ASSEMBLY

Note:
Shim plates shall not be placed under Bearing Assembly.

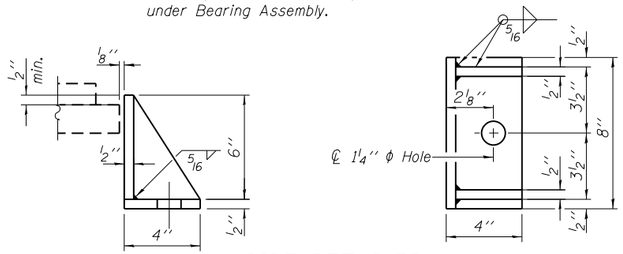

SIDE RETAINER

Equivalent rolled angle with stiffeners will be allowed in lieu of welded plates.

BILL OF MATERIAL

Item	Unit	Total
Elastomeric Bearing Assembly, Type I	Each	22
Elastomeric Bearing Assembly, Type II	Each	22
Anchor Bolts, 3/4''	Each	44
Anchor Bolts, 1''	Each	44

NOTES

1. Anchor bolts shall be ASTM F1554 all-thread (or an Engineer-approved alternate material) of the grade(s) and diameter(s) specified. The corresponding specified grade of AASHTO M314 anchor bolts may be used in lieu of ASTM F1554.
2. Anchor bolts for side retainers for Type I bearings may be cast in place or installed in holes drilled before or after members are in place.
3. Anchor bolts for Type II bearings shall be placed in holes drilled in the concrete through holes in the bottom bearing plate after members are in place. Side retainers shall be placed after bolts are installed.
4. Drilled and set anchor bolts shall be installed according to Article 521.06 of the Standard Specifications.
5. Side retainers and other steel members required for the elastomeric bearing assembly shall be included in the cost of Elastomeric Bearing Assembly, Type I or Type II.
6. The structural steel plates of the Bearing Assembly shall conform to the requirements of AASHTO M 270 Grade 50.
7. The 1/8'' PTFE sheet shall be bonded directly to the top steel plate with a two-component, medium viscosity epoxy resin, conforming to the requirements of the Federal Specification MMM-A-134, Type I. The bond agent shall be applied on the full area of the contact surfaces.
8. Bonding of 1/8'' PTFE sheet during vulcanizing process will be permitted provided the process and method of adjusting assembly height is approved by the Engineer.
9. Two 1/8 in. adjusting shims shall be provided for each bearing in addition to all other plates or shims and placed as shown on bearing details.
10. All bearings plates, side retainers, anchor bolts, nuts, washers and pintles shall be galvanized according to AASHTO M111 or M232 as applicable.

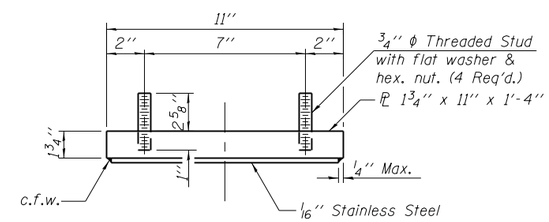

TOP BEARING ASSEMBLY

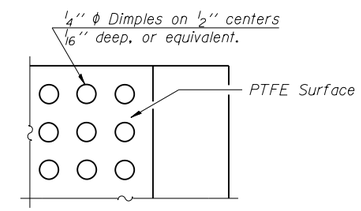

PLAN-PTFE SURFACE

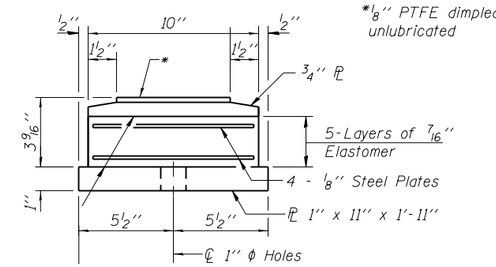

*1/8'' PTFE dimpled, unlubricated

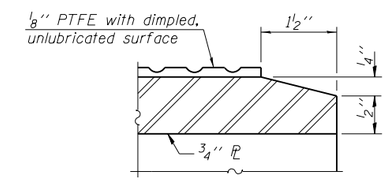

SECTION THRU PTFE

BOTTOM BEARING ASSEMBLY

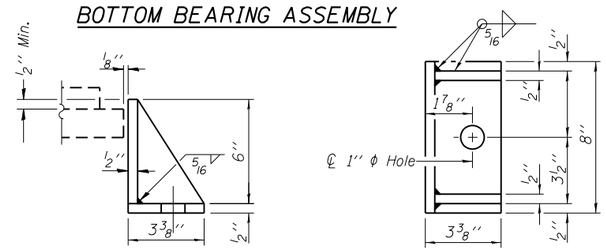

SIDE RETAINER

Equivalent rolled angle with stiffeners will be allowed in lieu of welded plates.

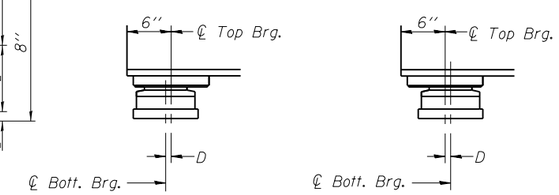

BELOW 50°F.
(Move bott. brg. away from fixed brg.)

ABOVE 50°F.
(Move bott. brg. toward fixed brg.)

SETTING ANCHOR BOLTS AT EXP. BRG.

D=1/8'' per each 100' of expansion for every 15° temp. change from the normal temp. of 50°F.

H:\Jobs2011\2013022\CAD\Structural\dgn\016-1149_Final\00\D160J15-s29-exp-brg-dt.dgn
5/20/2013 11:24:09 AM

GRÄEF
8501 W. Higgins Road; Suite 280
Chicago, Illinois 60631; (773) 399-0112

USER NAME =	DESIGNED - J.Z.	REVISED -	
	CHECKED - J.A.Z.	REVISED -	
PLOT SCALE =	DRAWN - E.E.J.	REVISED -	
PLOT DATE =	DATE - 5/17/2013	REVISED -	

STATE OF ILLINOIS
DEPARTMENT OF TRANSPORTATION

EXPANSION BEARINGS DETAILS
STRUCTURE NO. 016-1149

SHEET NO. S29 OF 50 SHEETS

F.A.I. RTE.	SECTION	COUNTY	TOTAL SHEETS	SHEET NO.
94	1920-B	COOK	137	88
		CONTRACT NO. 60J15		
		ILLINOIS FED. AID PROJECT		

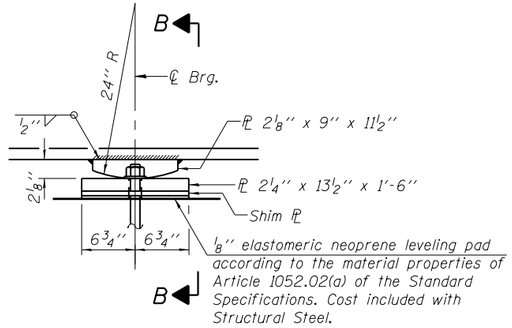

ELEVATION AT PIER

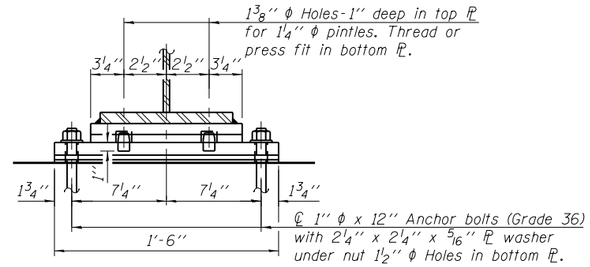

SECTION B-B

FIXED BEARING AT PIERS 2 & 3

(22 Required)

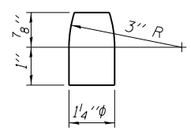

PINTLE

NOTES

1. Anchor bolts shall be ASTM F1554 all-thread (or an Engineer-approved alternate material) of the grade(s) and diameter(s) specified. The corresponding specified grade of AASHTO M314 anchor bolts may be used in lieu of ASTM F1554.
2. Anchor bolts at fixed bearings may be either cast in place or installed in holes drilled after the supported member is in place.
3. Drilled and set anchor bolts shall be installed according to Article 521.06 of the Standard Specifications.
4. The structural steel plates and pintles of the fixed bearings shall conform to the requirements of AASHTO M 270 Grade 50.
5. Two 1/8 in. adjusting shims shall be provided for each bearing in addition to all other plates or shims and placed as shown on bearing details.
6. All bearing plates, side retainers, anchor bolts, nuts, washers and pintles shall be galvanized according to AASHTO M111 or M232 as applicable.

BILL OF MATERIAL

Item	Unit	Total
Anchor Bolts, 1"	Each	44

H:\Jobs2011\2011J022\CAD\Structural\dgn\016-1149_Final\00\D16JJ5-s30-fixed-brg-dt.dgn
5/20/2013 11:24:10 AM

GRAEF
8501 W. Higgins Road; Suite 280
Chicago, Illinois 60631; (773) 399-0112

USER NAME =	DESIGNED - J.Z.	REVISED -	
	CHECKED - J.A.Z.	REVISED -	
PLOT SCALE =	DRAWN - E.E.J.	REVISED -	
PLOT DATE =	DATE - 5/17/2013	REVISED -	

STATE OF ILLINOIS
DEPARTMENT OF TRANSPORTATION

FIXED BEARINGS DETAILS
STRUCTURE NO. 016-1149

SHEET NO. S30 OF 50 SHEETS

F.A.I. RTE.	SECTION	COUNTY	TOTAL SHEETS	SHEET NO.
94	1920-B	COOK	137	89

CONTRACT NO. 60J15

ILLINOIS FED. AID PROJECT

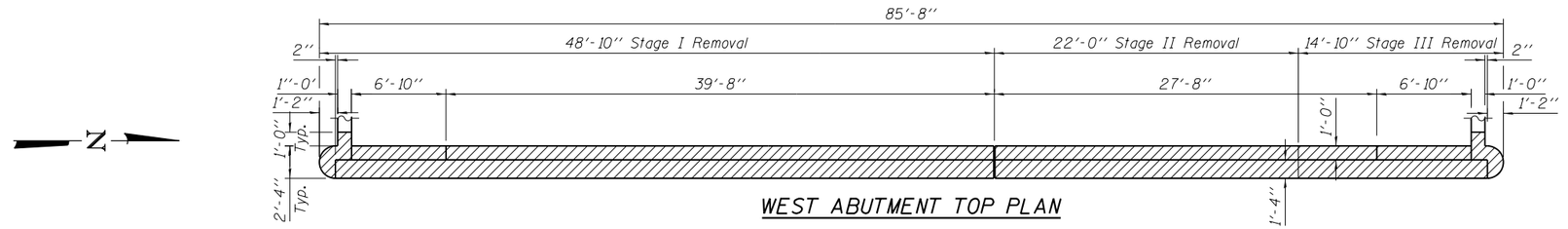

WEST ABUTMENT TOP PLAN

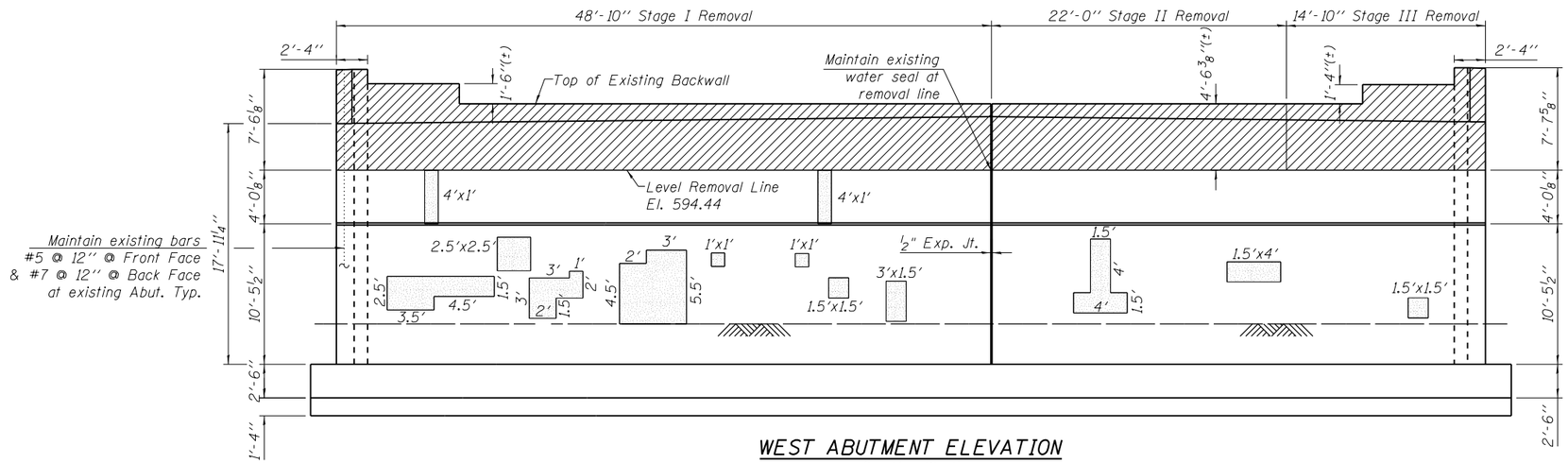

WEST ABUTMENT ELEVATION
(Looking West)

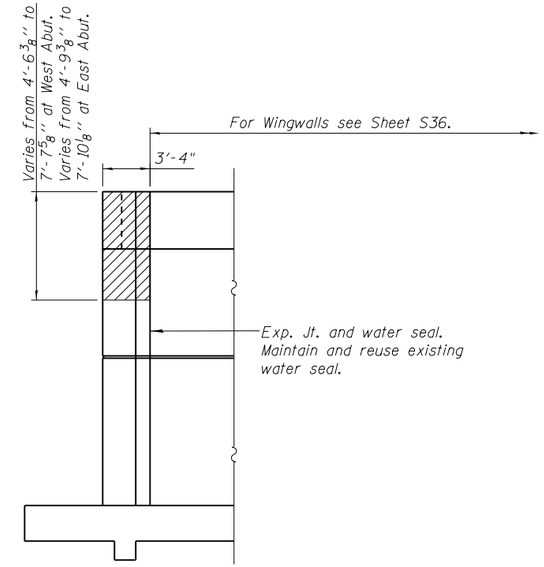

NW & SE ELEVATION
(NE & SW Opposite Hand)

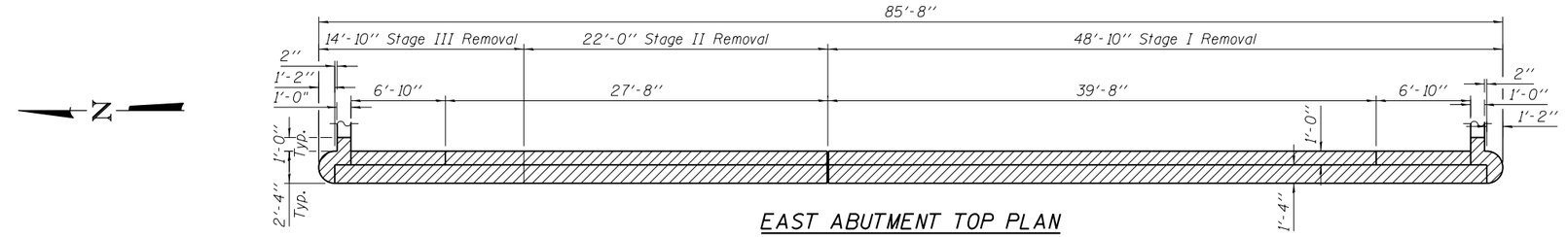

EAST ABUTMENT TOP PLAN

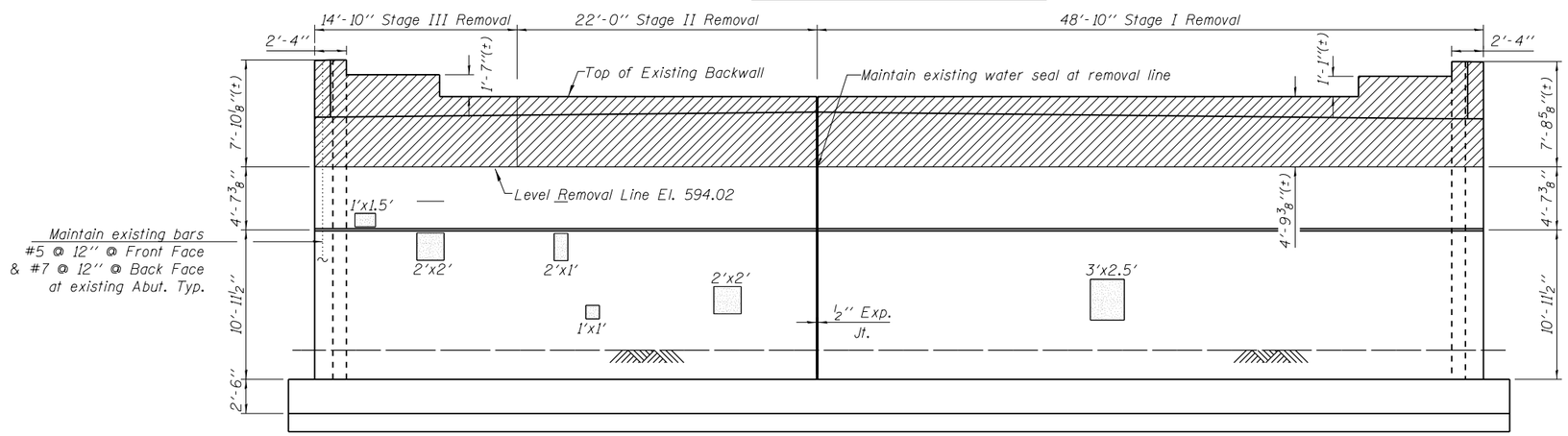

EAST ABUTMENT ELEVATION
(Looking East)

BILL OF MATERIAL

Item	Unit	Quantity
Concrete Removal	cu. yd.	70
Structural Repair of Concrete (Depth equal to or less than 5")	sq. ft.	114

LEGEND

Concrete Removal

Structural Repair of Concrete (Depth Equal to or Less than 5")

NOTES

1. Existing reinforcement shall be cleaned and incorporated into the new construction as appropriate. Cost included with Concrete Removal.

H:\Jobs20li\20li3022\CAD\Structural\dgn\016-li49_Final\00\bl60jl5-s3l-abut-rep.dgn
5/20/2013 11:24:10 AM

GRAEF
8501 W. Higgins Road; Suite 280
Chicago, Illinois 60631; (773) 399-0112

USER NAME =	DESIGNED - J.Z.	REVISED -	
	CHECKED - J.A.Z.	REVISED -	
PLOT SCALE =	DRAWN - E.E.J.	REVISED -	
PLOT DATE =	DATE - 5/17/2013	REVISED -	

STATE OF ILLINOIS
DEPARTMENT OF TRANSPORTATION

ABUTMENT REMOVAL & REPAIRS
STRUCTURE NO. 016-1149
SHEET NO. S31 OF 50 SHEETS

F.A.I. RTE.	SECTION	COUNTY	TOTAL SHEETS	SHEET NO.
94	1920-B	COOK	137	90
		CONTRACT NO. 60J15		
		ILLINOIS FED. AID PROJECT		

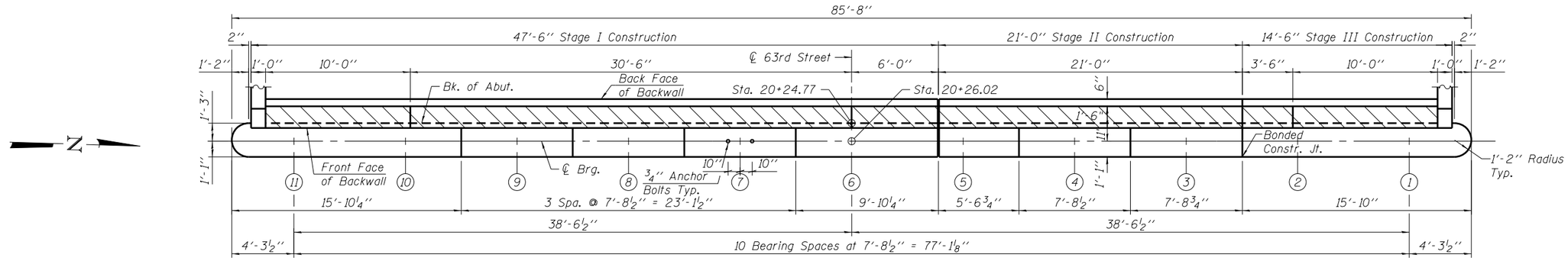

WEST ABUTMENT TOP PLAN

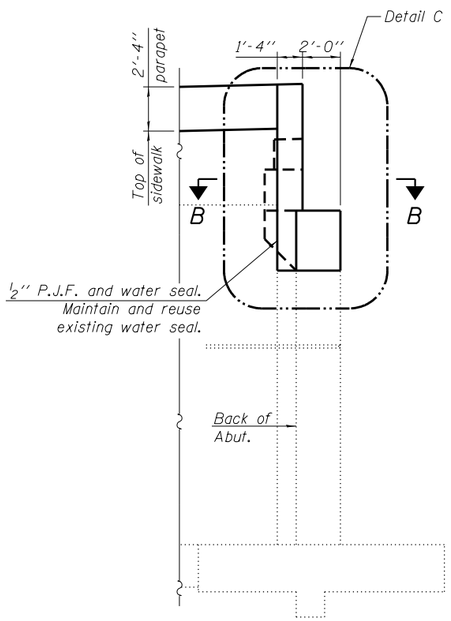

END VIEW

(South side shown, North side opposite hand)

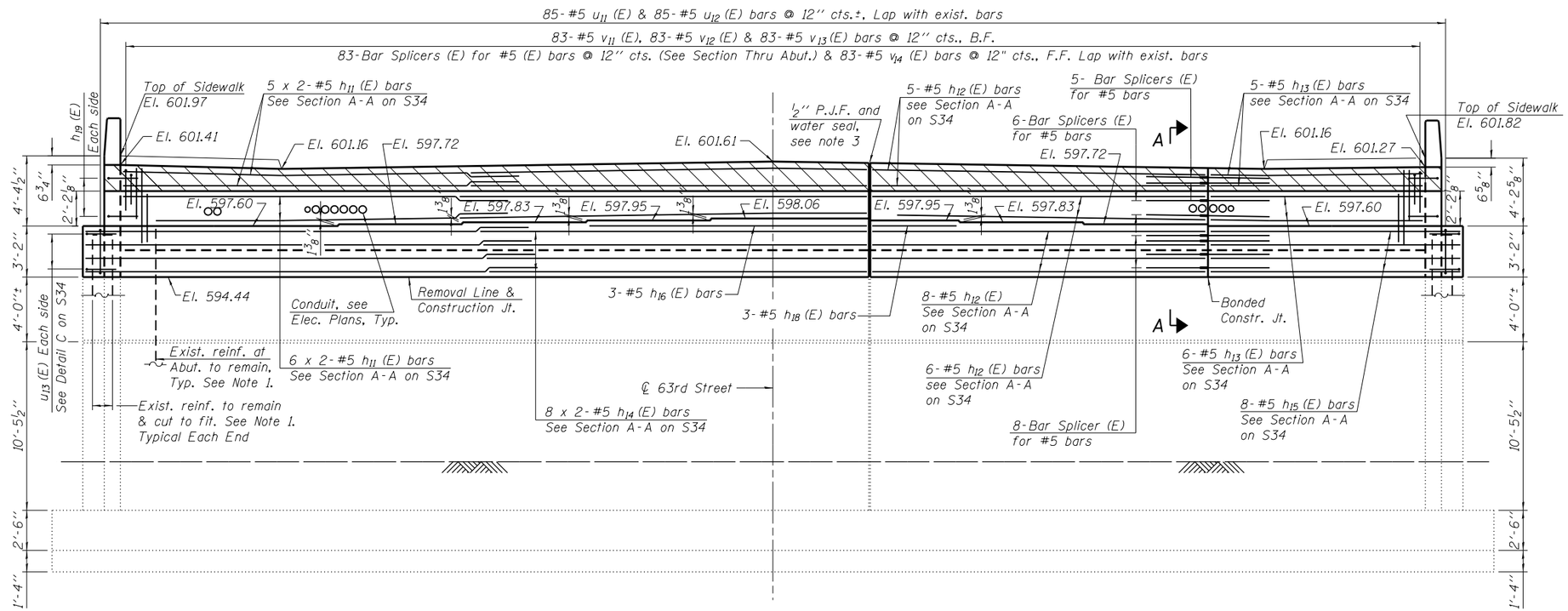

WEST ABUTMENT ELEVATION

(Looking West)

NOTES

1. Existing reinforcement shall be cleaned and incorporated into the new construction as appropriate. Cost included with Concrete Removal.
2. For Sections and Detail C, see Sheet S34.
3. A rubber water seal with dimensions similar to the existing seal shall be provided at the ½" expansion joint 6 feet North of the centerline. The water seal shall be bonded to the top of the existing seal per the manufacturer's recommendations and shall extend up to meet the 6" horizontal water seal in the abutment backwall. This cost shall be included in Concrete Superstructure.

H:\Jobs2011\2011\3022\CAD\Structural\dgn\016-1149_Final\00\D160J15-s32-w-abut.dgn
5/20/2013 11:24:11 AM

GRAEF
8501 W. Higgins Road; Suite 280
Chicago, Illinois 60631; (773) 399-0112

USER NAME =	DESIGNED - J.Z.	REVISED -	
	CHECKED - J.A.Z.	REVISED -	
PLOT SCALE =	DRAWN - E.E.J.	REVISED -	
PLOT DATE =	DATE - 5/17/2013	REVISED -	

STATE OF ILLINOIS
DEPARTMENT OF TRANSPORTATION

WEST ABUTMENT
STRUCTURE NO. 016-1149

SHEET NO. S32 OF 50 SHEETS

F.A.I. RTE.	SECTION	COUNTY	TOTAL SHEETS	SHEET NO.
94	1920-B	COOK	137	91

CONTRACT NO. 60J15

ILLINOIS FED. AID PROJECT

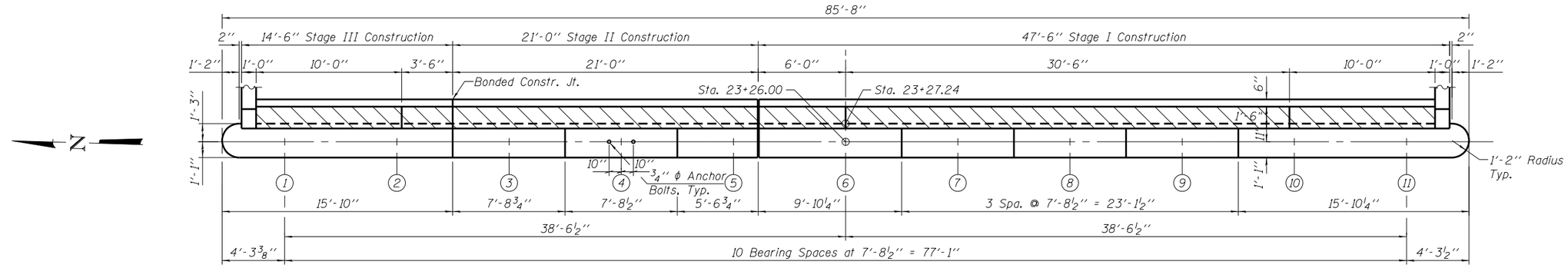

EAST ABUTMENT TOP PLAN

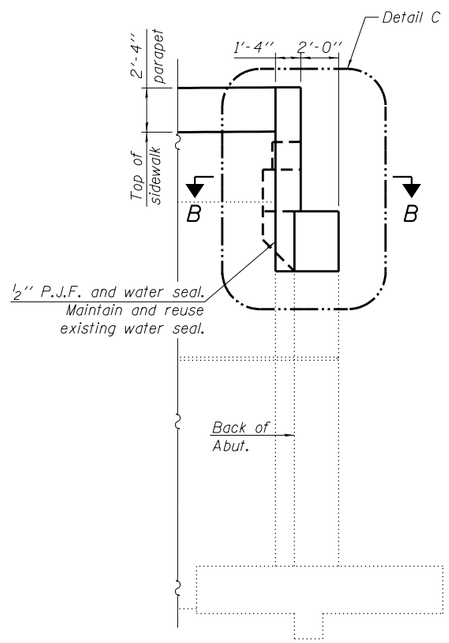

END VIEW

(North side shown, South side opposite hand)

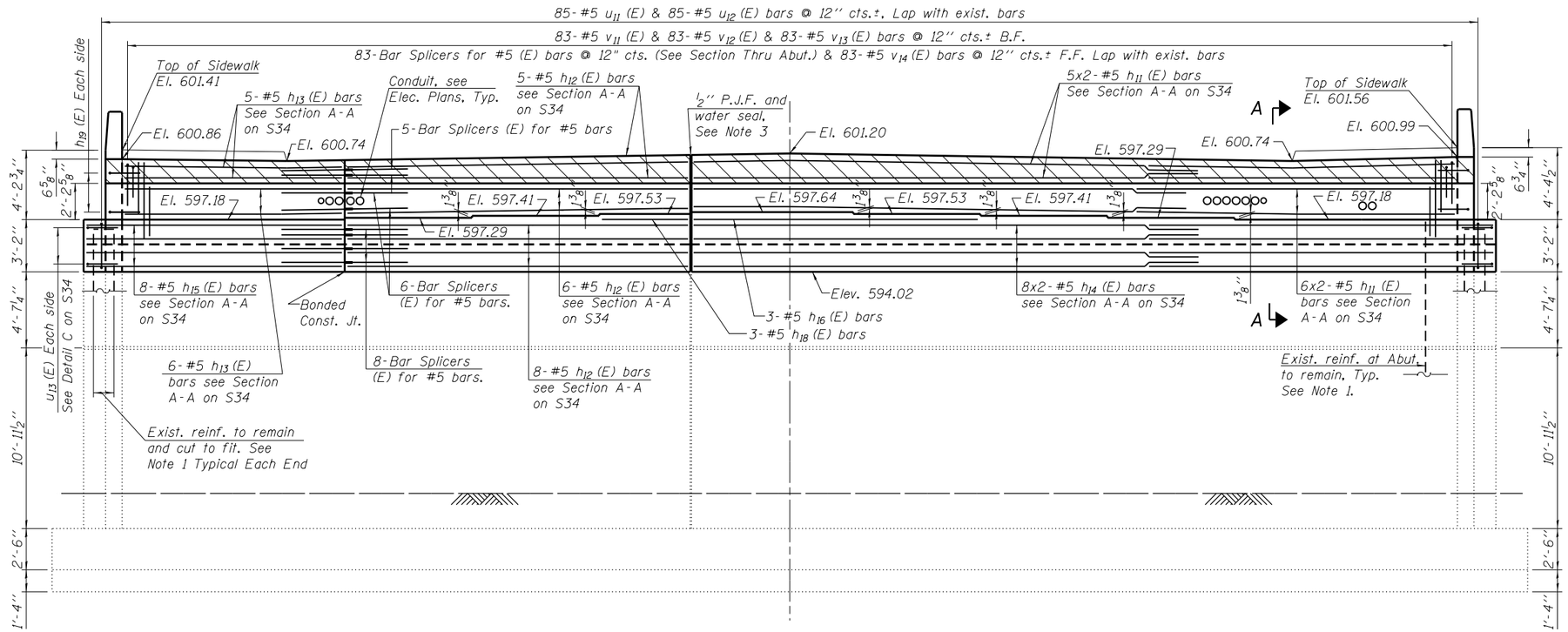

EAST ABUTMENT ELEVATION

(Looking East)

NOTES

1. Existing reinforcement shall be cleaned and incorporated into the new construction as appropriate. Cost included with Concrete Removal.
2. For Sections and Detail C, see Sheet S34.
3. A rubber water seal with dimensions similar to the existing seal shall be provided at the 1/2" expansion joint 6 feet North of the centerline. The water seal shall be bonded to the top of the existing seal per the manufacturer's recommendations and shall extend up to meet the 6" horizontal water seal in the abutment backwall. This cost shall be included in Concrete Superstructure.

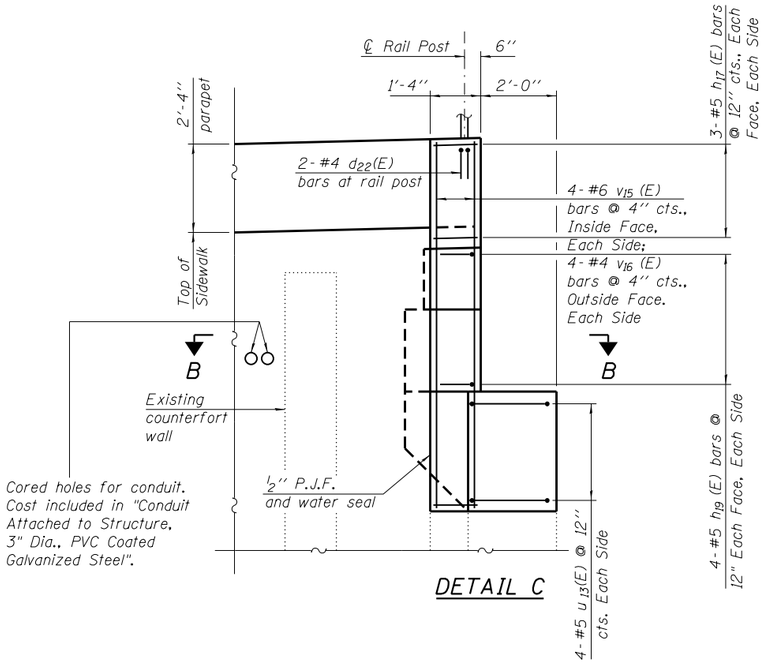

DETAIL C

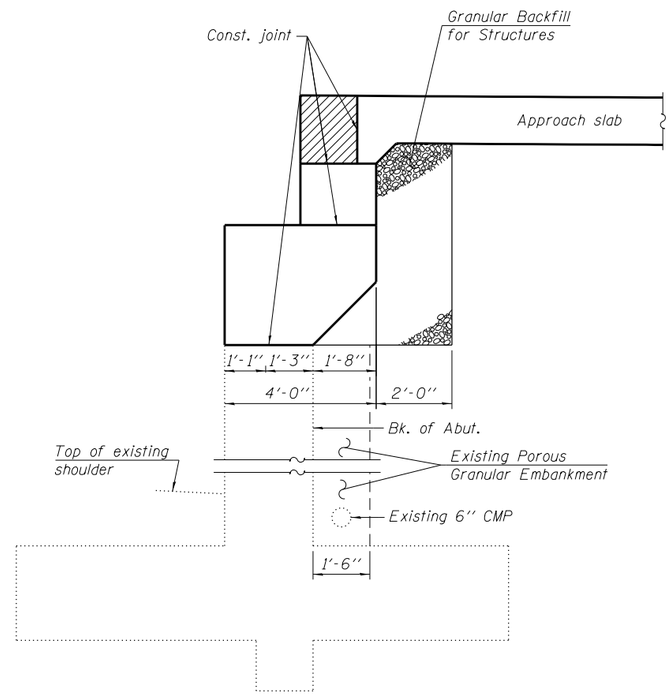

SECTION THRU ABUTMENTS

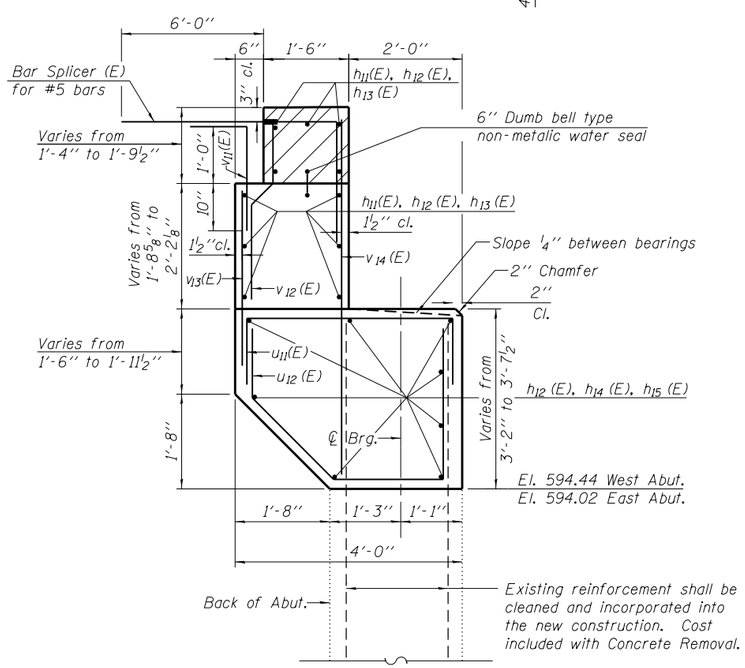

SECTION A-A

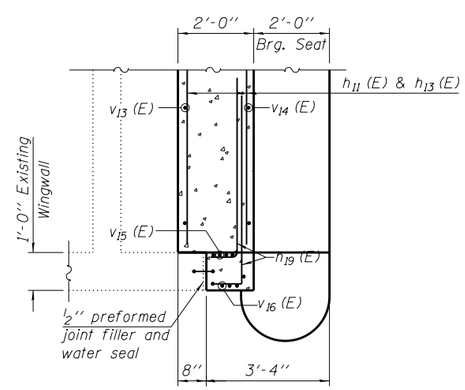

Conduit penetrations not shown

SECTION B-B

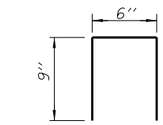

BAR d_{22}(E)

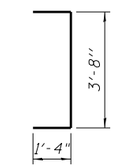

BAR u_{11} (E)

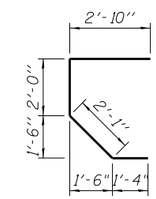

BAR u_{12} (E)

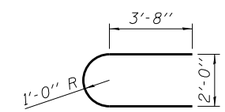

BAR u_{13} (E)

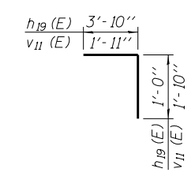

BAR h_{19} (E) & v_{11} (E)

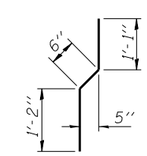

BAR v_{12} (E)

WEST ABUTMENT BILL OF MATERIAL

Bar	No.	Size	Length	Shape
d_{22}(E)	4	#4	2'-0''	
h_{11} (E)	22	#5	25'-1''	
h_{12} (E)	19	#5	20'-8''	
h_{13} (E)	11	#5	13'-2''	
h_{14} (E)	16	#5	25'-6''	
h_{15} (E)	8	#5	14'-6''	
h_{16} (E)	3	#5	17'-3''	
h_{17} (E)	12	#5	1'-0''	
h_{18} (E)	3	#5	5'-3''	
h_{19} (E)	16	#5	4'-10''	
u_{11} (E)	85	#5	6'-4''	
u_{12} (E)	85	#5	8'-3''	
u_{13} (E)	8	#5	10'-6''	
v_{11} (E)	83	#5	3'-9''	
v_{12} (E)	83	#5	2'-9''	
v_{13} (E)	83	#5	3'-4''	
v_{14} (E)	83	#5	6'-0''	
v_{15} (E)	8	#6	9'-6''	
v_{16} (E)	8	#4	9'-6''	
Structure Excavation			Cu. yd	117
Concrete Structures			Cu. yd	51.1
Reinforcement Bars, Epoxy Coated			Pound	4,770
Concrete Sealer			Sq. Ft.	771
Granular Backfill for Structures			Cu. yd	46

EAST ABUTMENT BILL OF MATERIAL

Bar	No.	Size	Length	Shape
d_{22}(E)	4	#4	2'-0''	
h_{11} (E)	22	#5	25'-1''	
h_{12} (E)	19	#5	20'-8''	
h_{13} (E)	11	#5	13'-2''	
h_{14} (E)	16	#5	25'-6''	
h_{15} (E)	8	#5	14'-6''	
h_{16} (E)	3	#5	17'-3''	
h_{17} (E)	12	#5	1'-0''	
h_{18} (E)	3	#5	5'-3''	
h_{19} (E)	16	#5	4'-10''	
u_{11} (E)	85	#5	6'-4''	
u_{12} (E)	85	#5	8'-3''	
u_{13} (E)	8	#5	10'-6''	
v_{11} (E)	83	#5	3'-9''	
v_{12} (E)	83	#5	2'-9''	
v_{13} (E)	83	#5	3'-4''	
v_{14} (E)	83	#5	6'-0''	
v_{15} (E)	8	#6	9'-6''	
v_{16} (E)	8	#4	9'-6''	
Structure Excavation			Cu. yd	100
Concrete Structures			Cu. yd	51.4
Reinforcement Bars, Epoxy Coated			Pound	4,770
Concrete Sealer			Sq. Ft.	772
Granular Backfill for Structures			Cu. yd	46

NOTES

1. For details of Bar Splicers, see sheet S49.
2. Hatched area to be poured after superstructure false work has been removed. Quantity of concrete included with Concrete Superstructure.

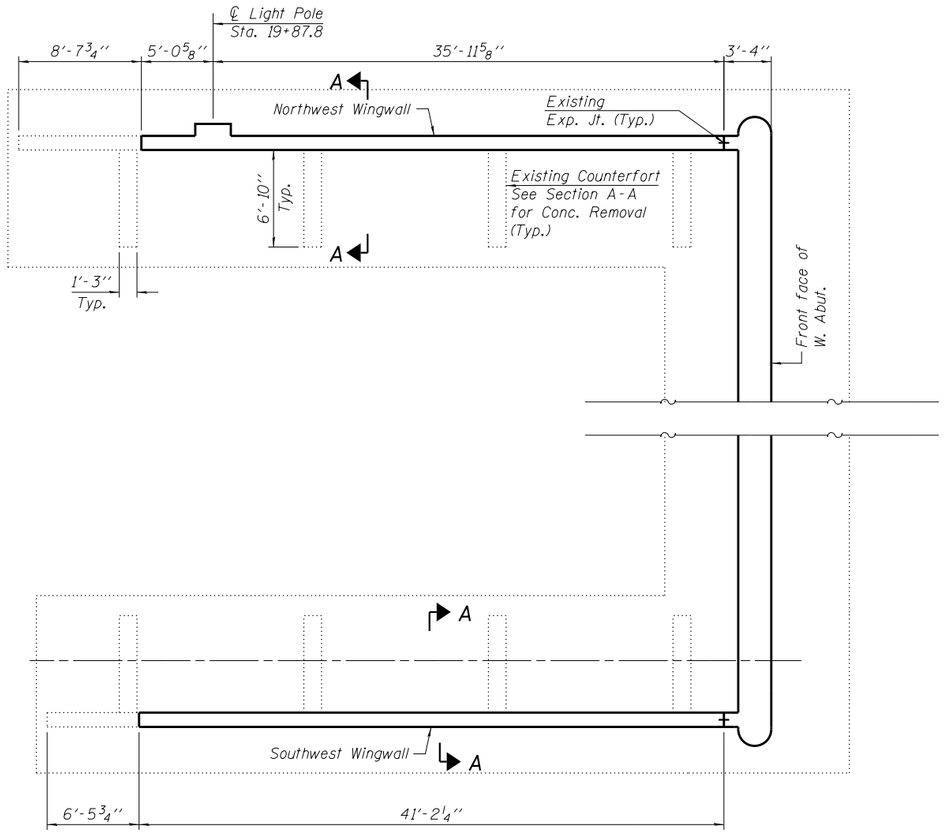

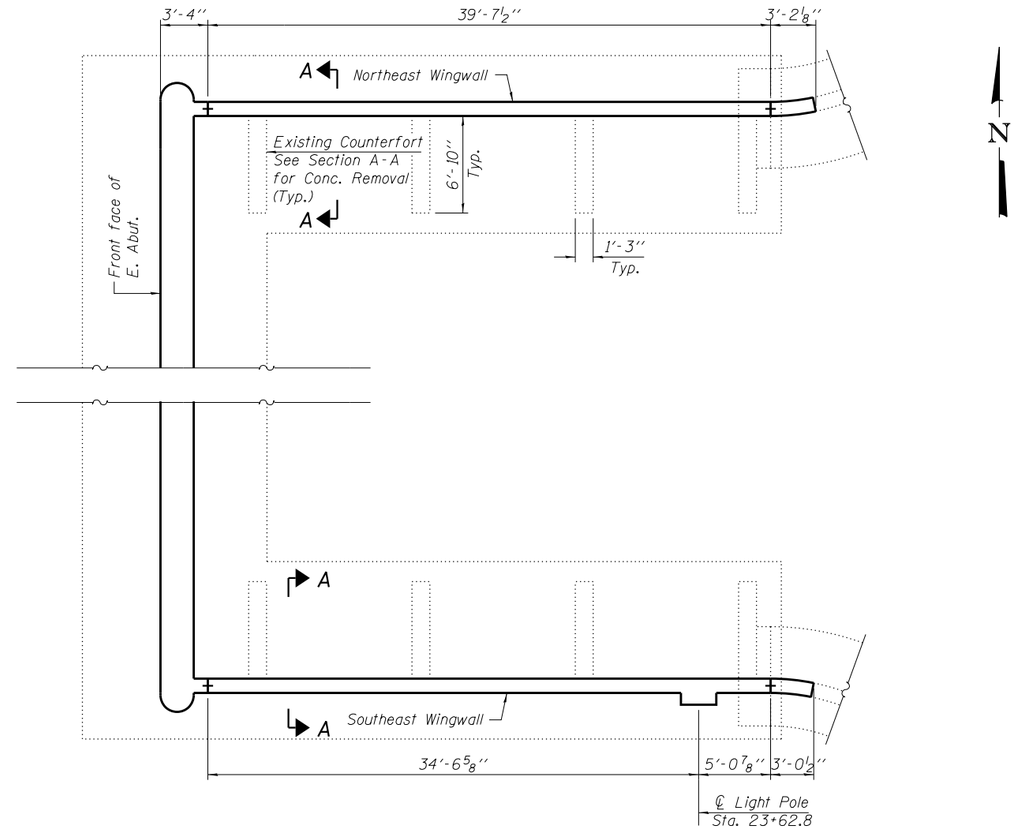

WINGWALL PLAN

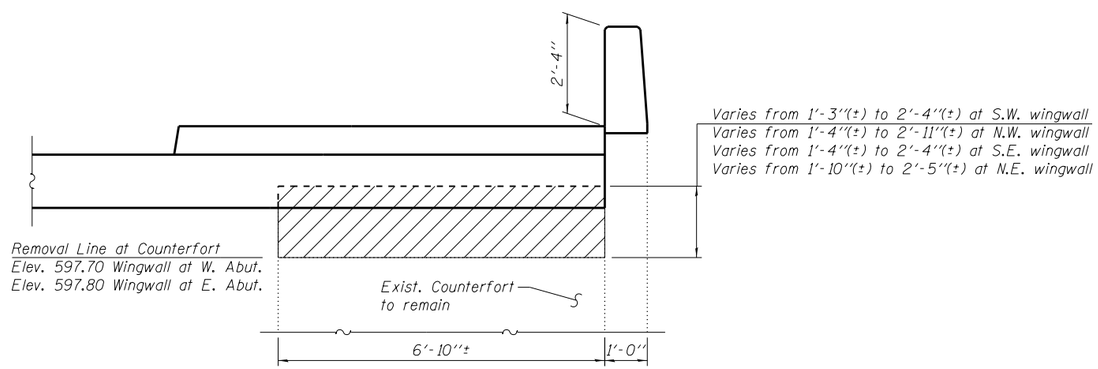

SECTION A-A

LEGEND

Concrete Removal

NOTES

1. Work this sheet with sheets S36 and S37.

H:\Jobs20li\20li3022\CAD\Structural\dgn\016-1149_Final\00\D160J15-s35-ww-repl.dgn
5/20/2013 11:24:12 AM

GRāEF 8501 W. Higgins Road; Suite 280 Chicago, Illinois 60631; (773) 399-0112	USER NAME =	DESIGNED - J.Z.	REVISED -	STATE OF ILLINOIS DEPARTMENT OF TRANSPORTATION	WINGWALL REMOVAL & REPAIRS I STRUCTURE NO. 016-1149	F.A.I. RTE.	SECTION	COUNTY	TOTAL SHEETS	SHEET NO.
		CHECKED - J.A.Z.	REVISED -			94	1920-B	COOK	137	94
	PLOT SCALE =	DRAWN - E.E.J.	REVISED -			CONTRACT NO. 60J15				
	PLOT DATE =	DATE - 5/17/2013	REVISED -		SHEET NO. S35 OF 50 SHEETS	ILLINOIS FED. AID PROJECT				

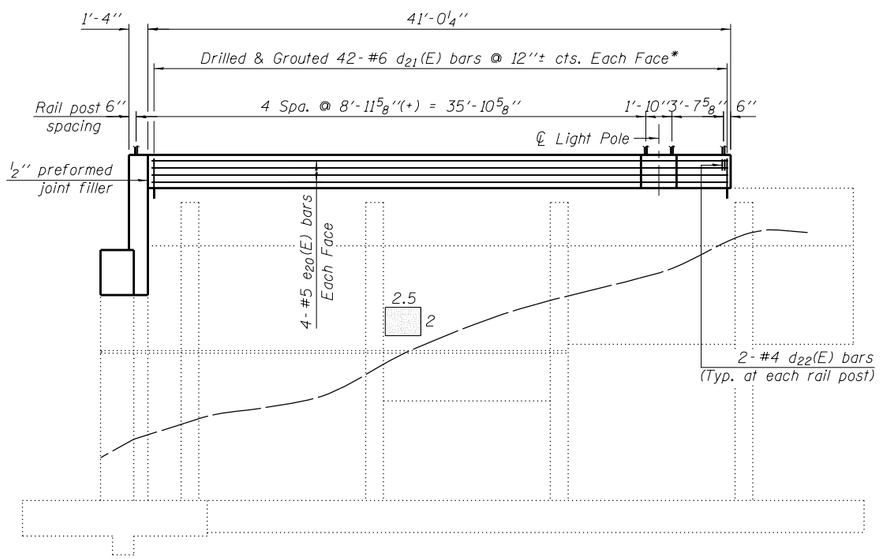

NORTHWEST WINGWALL ELEVATION

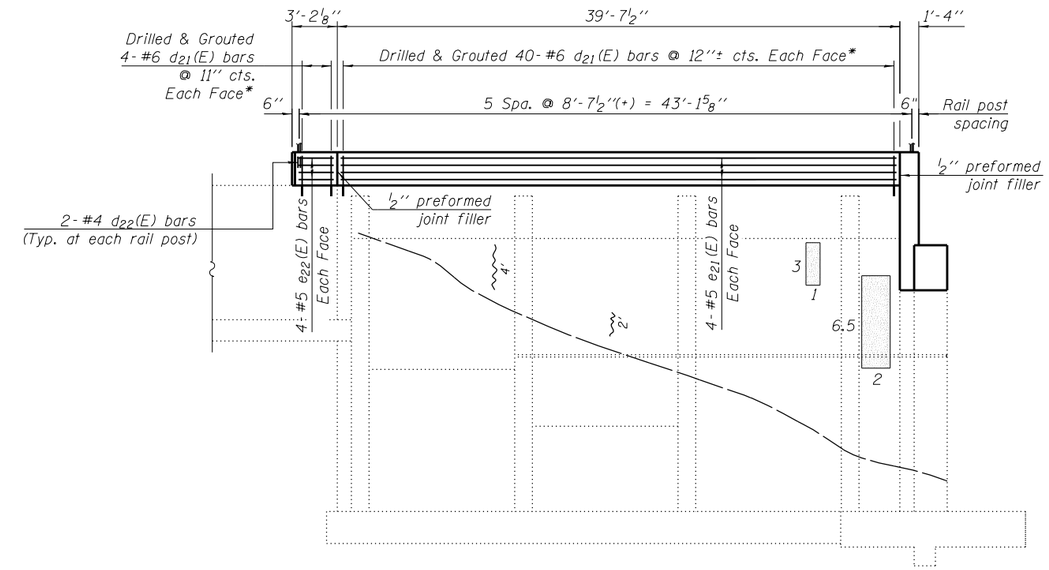

NORTHEAST WINGWALL ELEVATION

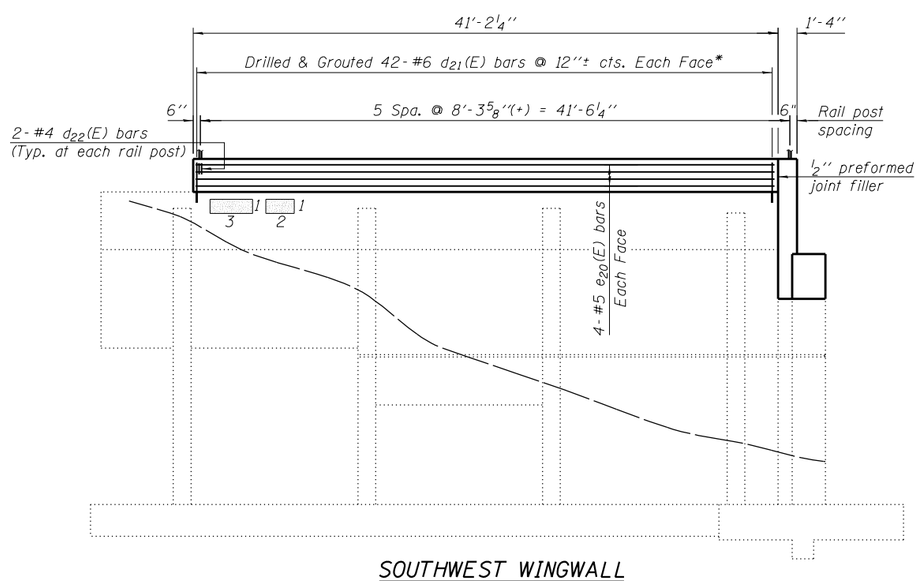

SOUTHWEST WINGWALL ELEVATION

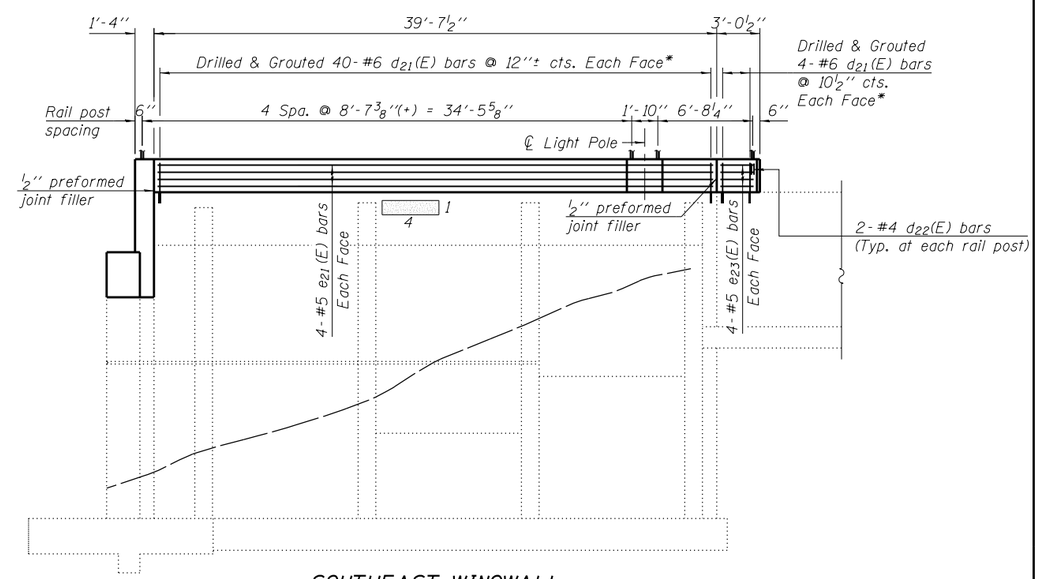

SOUTHEAST WINGWALL ELEVATION

LEGEND

Structural Repair of Concrete (Depth Equal to or Less than 5")

3' Epoxy Crack Injection

NOTE

*Epoxy grout d_{21}(E) bars in 12" (min.) drilled holes according to Article 584 of the Standard Specifications.

GRÄEF
8501 W. Higgins Road; Suite 280
Chicago, Illinois 60631; (773) 399-0112

USER NAME =	DESIGNED - J.Z.	REVISED -	
	CHECKED - J.A.Z.	REVISED -	
PLOT SCALE =	DRAWN - E.E.J.	REVISED -	
PLOT DATE =	DATE - 5/17/2013	REVISED -	

STATE OF ILLINOIS
DEPARTMENT OF TRANSPORTATION

WINGWALL REMOVAL & REPAIRS II
STRUCTURE NO. 016-1149

SHEET NO. S36 OF 50 SHEETS

F.A.I. RTE.	SECTION	COUNTY	TOTAL SHEETS	SHEET NO.
94	1920-B	COOK	137	95
		CONTRACT NO. 60J15		
	ILLINOIS	FED. AID PROJECT		

H:\Jobs2011\2011302\CAD\Structural\dgn\016-1149_Final\00\D160J15-s36-ww-rep2.dgn
5/20/2013 11:24:13 AM

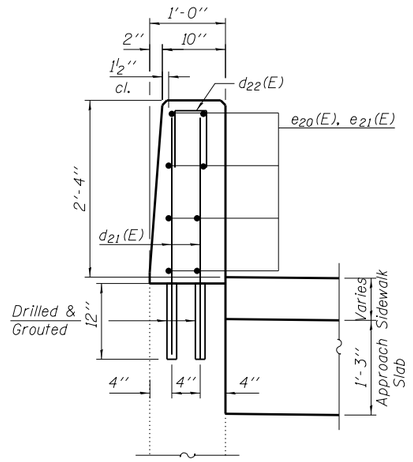

SECTION THRU PARAPET

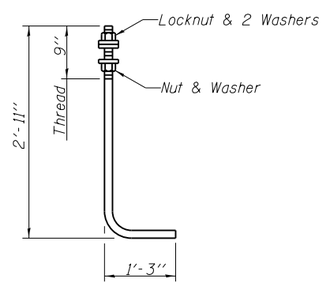

ANCHOR ROD

Diameter as specified for light poles.
(ASTM F 1554 Grade 105)

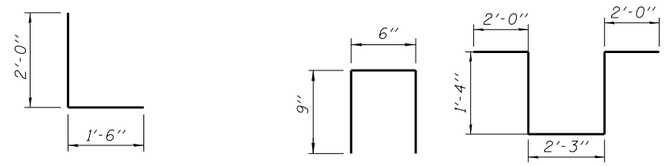

BARS $d_{23}(E)$ BAR $d_{22}(E)$ BAR $d_{24}(E)$

FOUR WINGWALLS BILL OF MATERIAL

Bar	No.	Size	Length	Shape
$d_{21}(E)$	344	#6	3'-2"	
$d_{22}(E)$	44	#4	2'-0"	
$d_{23}(E)$	6	#6	3'-6"	
$d_{24}(E)$	10	#6	8'-11"	
$e_{20}(E)$	16	#5	40'-8"	
$e_{21}(E)$	16	#5	39'-3"	
$e_{22}(E)$	8	#5	2'-10"	
$e_{23}(E)$	8	#5	2'-8"	
Concrete Removal			Cu. Yds.	15
Reinforcement Bars, Epoxy Coated			Pound	3,240
Concrete Superstructure			Cu. Yds.	13.7
Structural Repair of Concrete (Depth equal to or less than to 5")			Sq. Ft.	30
Epoxy Crack Injection			Ft.	6

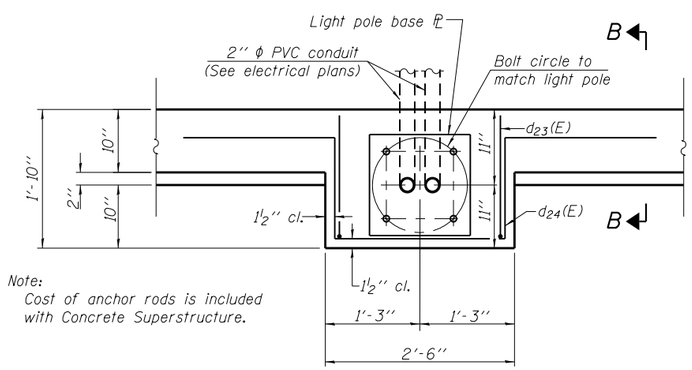

Note:
Cost of anchor rods is included with Concrete Superstructure.

PLAN-LIGHT POLE BASE

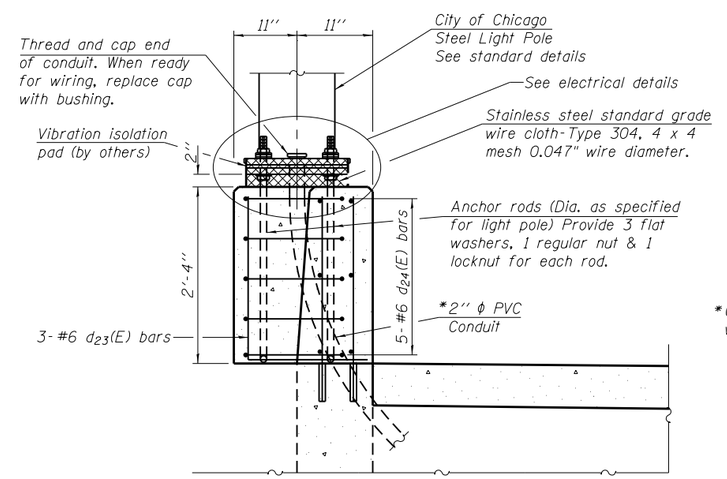

*Chip concrete at top of existing wingwall to fit the conduit.

SECTION B-B

H:\Jobs2011\20113022\CAD\Structural\dgn\016-1149_Final\00\D160J15-s37-ww-dt.dgn
5/20/2013 11:24:13 AM

GRÆF
8501 W. Higgins Road; Suite 280
Chicago, Illinois 60631; (773) 399-0112

USER NAME =	DESIGNED - J.Z.	REVISED -	
	CHECKED - J.A.Z.	REVISED -	
PLOT SCALE =	DRAWN - E.E.J.	REVISED -	
PLOT DATE =	DATE - 5/17/2013	REVISED -	

STATE OF ILLINOIS
DEPARTMENT OF TRANSPORTATION

WINGWALL DETAILS
STRUCTURE NO. 016-1149
SHEET NO. S37 OF 50 SHEETS

F.A.I. RTE.	SECTION	COUNTY	TOTAL SHEETS	SHEET NO.
94	1920-B	COOK	137	96
		CONTRACT NO. 60J15		
	ILLINOIS	FED. AID PROJECT		

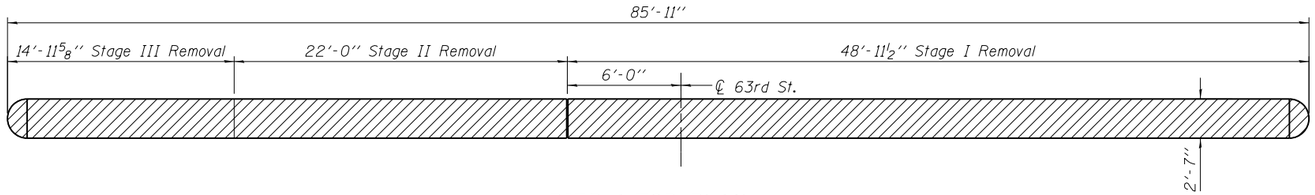

PIER 1 TOP PLAN

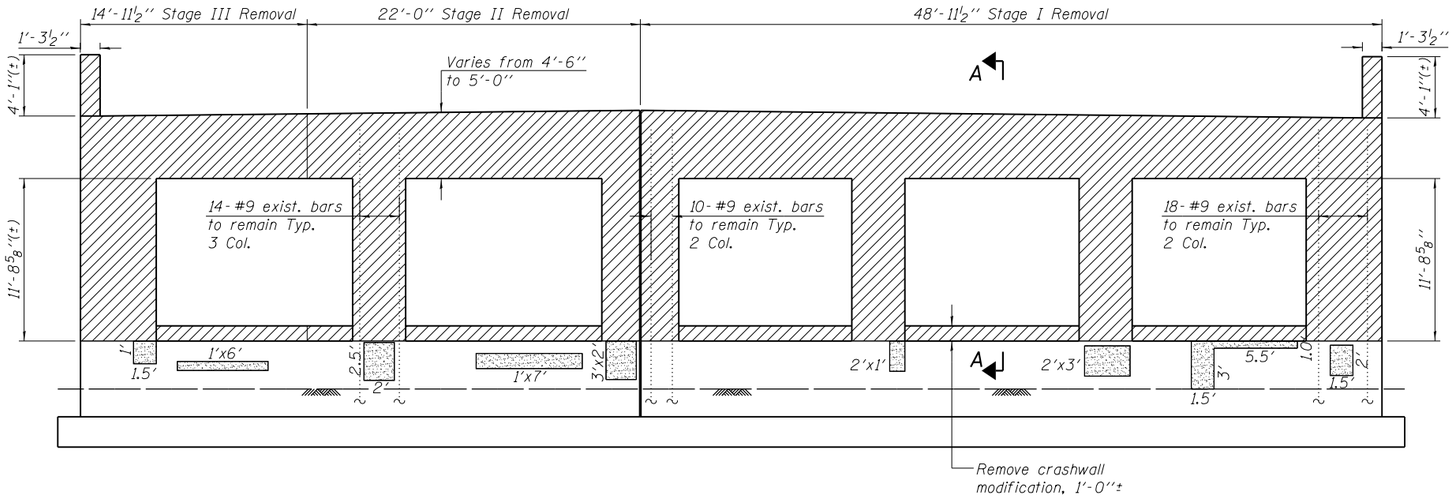

PIER 1 ELEVATION

(Looking East)

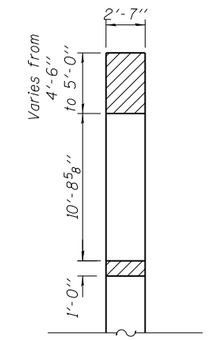

SECTION A-A

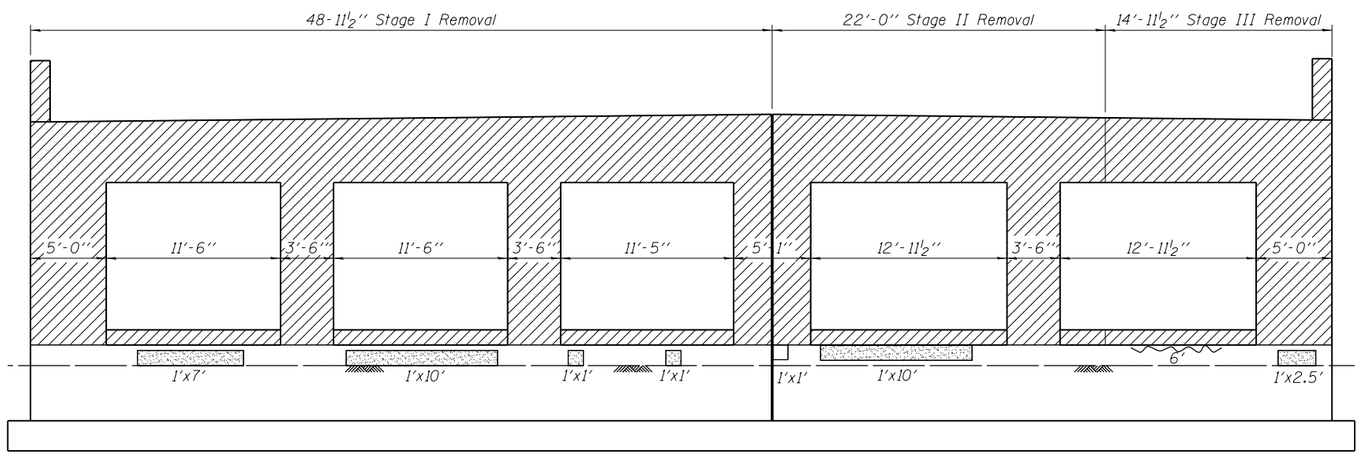

PIER 1 ELEVATION

(Looking West)

BILL OF MATERIAL

Item	Unit	Quantity
Concrete Removal	cu. yd.	66
Epoxy Crack Injection	ft.	6
Structural Repair of Concrete (Depth equal to or Less than 5")	sq. ft.	79

LEGEND

Concrete Removal

Structural Repair of Concrete (Depth Equal to or Less than 5")

3' Epoxy Crack Injection

NOTES

1. Clean and reuse 8'-7" length of existing #9 vertical column bars at all columns. Cost included with Concrete Removal.

H:\Jobs2011\2011302\CAD\Structural\dgn\016-1149_Final\00\D160J15-s38-pier1-rep.dgn
5/20/2013 11:24:14 AM

GRAEF
8501 W. Higgins Road; Suite 280
Chicago, Illinois 60631; (773) 399-0112

USER NAME =	DESIGNED - J.Z.	REVISED -	
	CHECKED - J.A.Z.	REVISED -	
PLOT SCALE =	DRAWN - E.E.J.	REVISED -	
PLOT DATE =	DATE - 5/17/2013	REVISED -	

STATE OF ILLINOIS
DEPARTMENT OF TRANSPORTATION

PIER 1 REMOVAL & REPAIR
STRUCTURE NO. 016-1149

SHEET NO. S38 OF 50 SHEETS

F.A.I. RTE.	SECTION	COUNTY	TOTAL SHEETS	SHEET NO.
94	1920-B	COOK	137	97
		CONTRACT NO. 60J15		
		ILLINOIS FED. AID PROJECT		

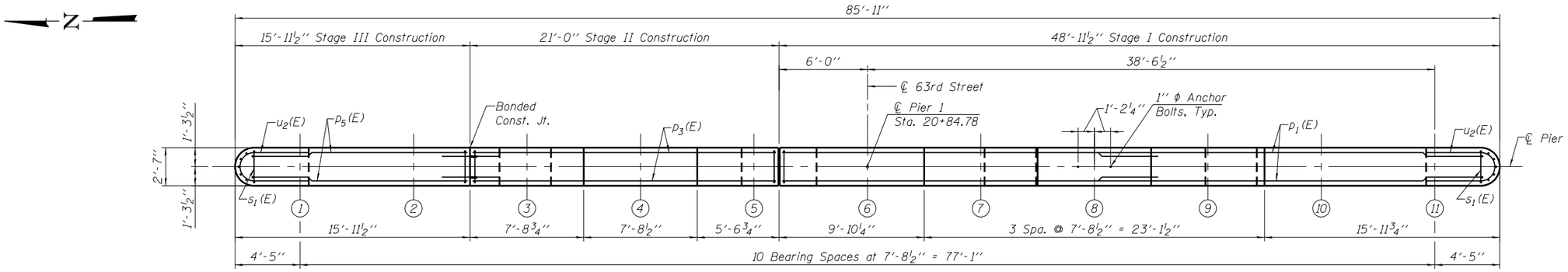

TOP PLAN

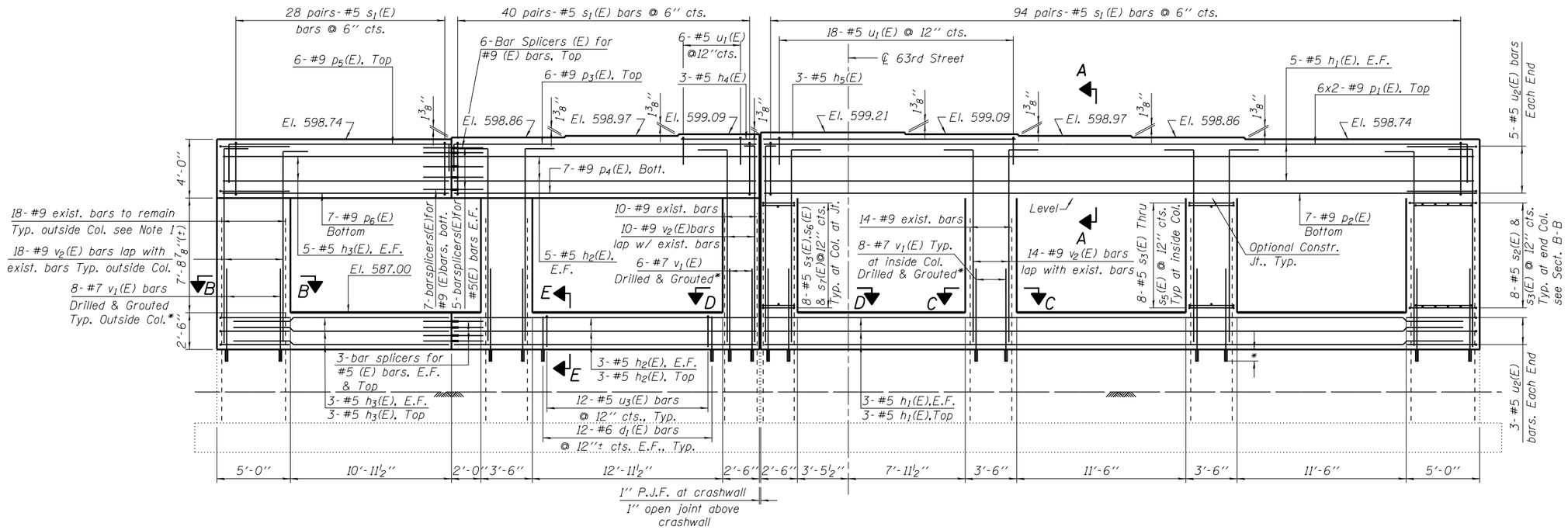

PIER 1 ELEVATION

(Looking East)

NOTES

1. Clean and reuse 8'-7" length of existing #9 vertical column bars at all columns. Cost included with Concrete Removal.
2. *Epoxy grout v_1(E) bars in 13" (min.) drilled holes according to Article 584 of the Standard Specifications.
3. See Sheets S46 and S47 for sections and Bill of Material.
4. Space reinforcement in cap to miss anchor bolts.
5. Pour steps monolithically with cap.

H:\Jobs20ln\20l3022\CAD\Structural\dgn\0l6-ll49_Final\00\D160J15-s39-pier1.dgn
5/20/2013 11:24:14 AM

GRAEF
8501 W. Higgins Road; Suite 280
Chicago, Illinois 60631; (773) 399-0112

USER NAME =	DESIGNED - J.Z.	REVISED -	
	CHECKED - J.A.Z.	REVISED -	
PLOT SCALE =	DRAWN - E.E.J.	REVISED -	
PLOT DATE =	DATE - 5/17/2013	REVISED -	

STATE OF ILLINOIS
DEPARTMENT OF TRANSPORTATION

PIER 1 PLAN & ELEVATION
STRUCTURE NO. 016-1149

SHEET NO. S39 OF 50 SHEETS

F.A.I. RTE.	SECTION	COUNTY	TOTAL SHEETS	SHEET NO.
94	1920-B	COOK	137	98

CONTRACT NO. 60J15

ILLINOIS FED. AID PROJECT

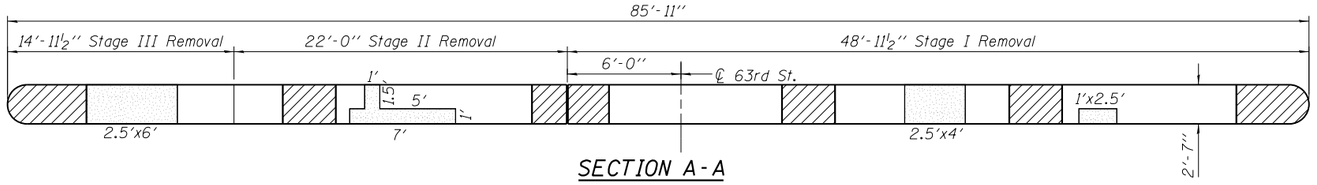

SECTION A-A

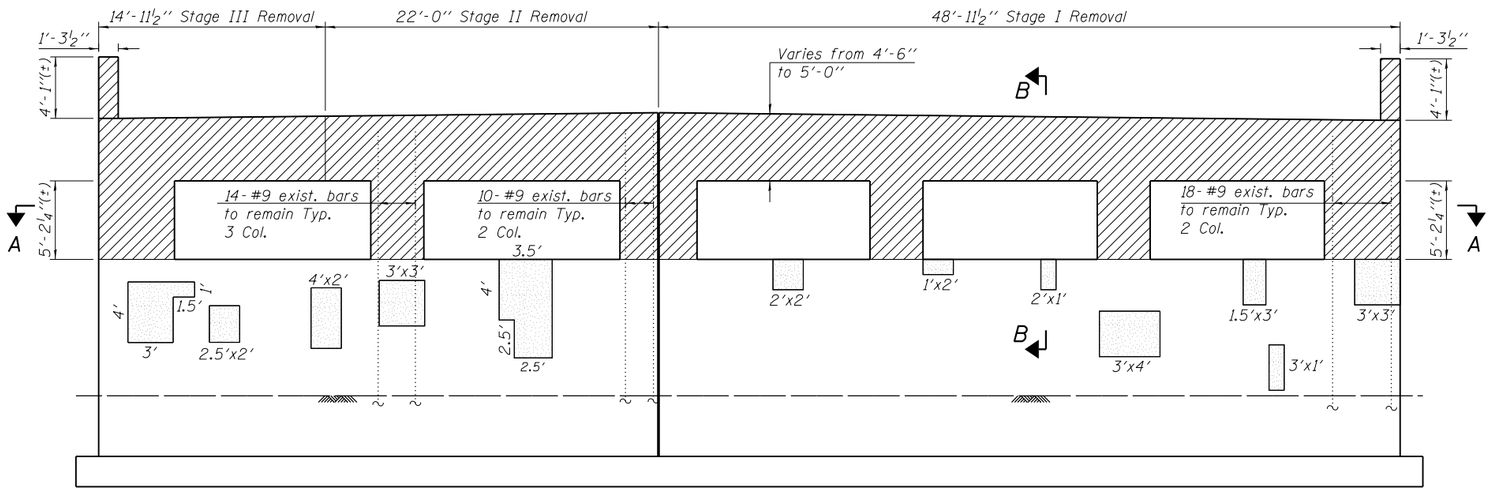

PIER 2 ELEVATION

(Looking East)

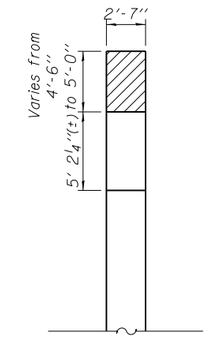

SECTION B-B

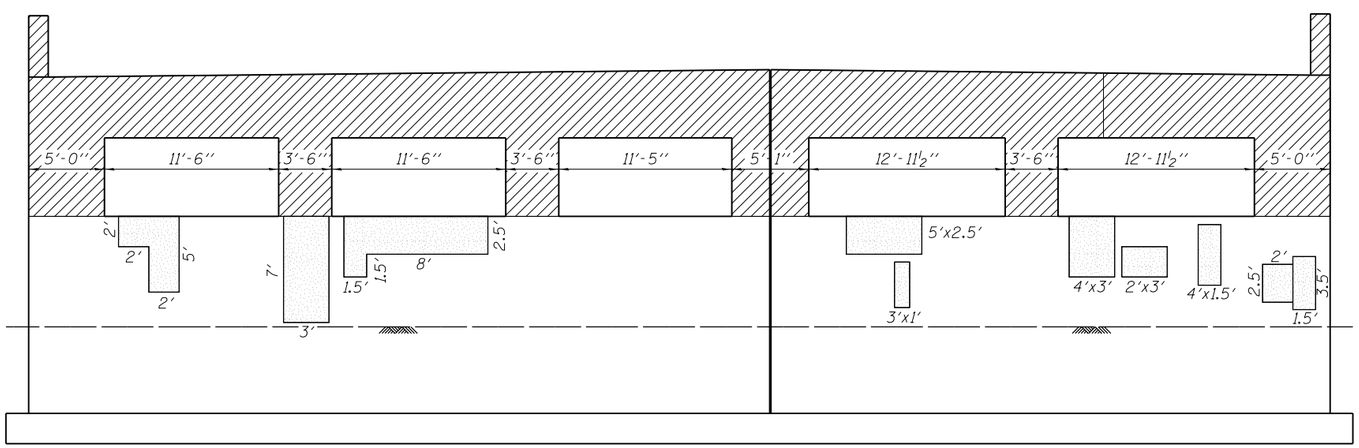

PIER 2 ELEVATION

(Looking West)

BILL OF MATERIAL

Item	Unit	Quantity
Concrete Removal	cu. yd.	48
Structural Repair of Concrete (Depth equal to or Less than 5")	sq. ft.	239

LEGEND

Concrete Removal

Structural Repair of Concrete (Depth Equal to or Less than 5")

NOTES

1. Clean and reuse 8'-7" length of existing #9 vertical column bars at all columns. Cost included with Concrete Removal.

H:\Jobs2011\20113022\CAD\Structural\dgn\016-1149_Final\00\D160J15-s40-pier2-rep.dgn
5/20/2013 11:24:14 AM

GRAEF
8501 W. Higgins Road; Suite 280
Chicago, Illinois 60631; (773) 399-0112

USER NAME =	DESIGNED - J.Z.	REVISED -	
	CHECKED - J.A.Z.	REVISED -	
PLOT SCALE =	DRAWN - E.E.J.	REVISED -	
PLOT DATE =	DATE - 5/17/2013	REVISED -	

STATE OF ILLINOIS
DEPARTMENT OF TRANSPORTATION

PIER 2 REMOVAL & REPAIR
STRUCTURE NO. 016-1149

SHEET NO. S40 OF 50 SHEETS

F.A.I. RTE.	SECTION	COUNTY	TOTAL SHEETS	SHEET NO.
94	1920-B	COOK	137	99

CONTRACT NO. 60J15

ILLINOIS FED. AID PROJECT

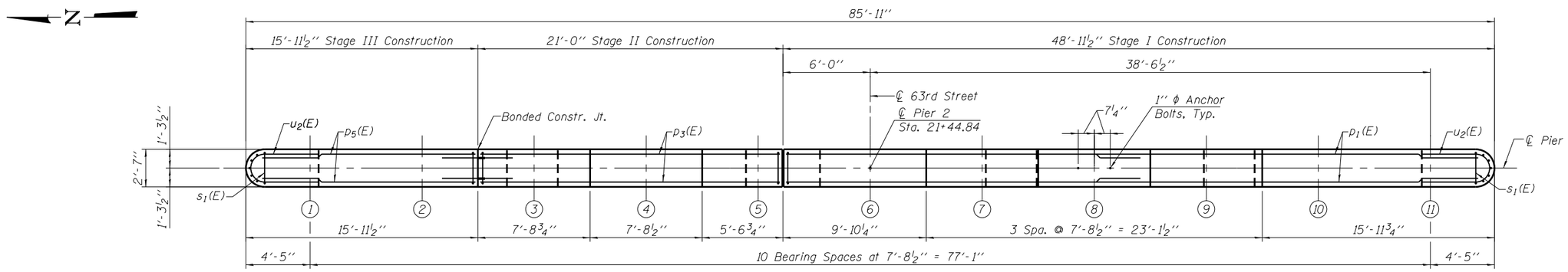

TOP PLAN

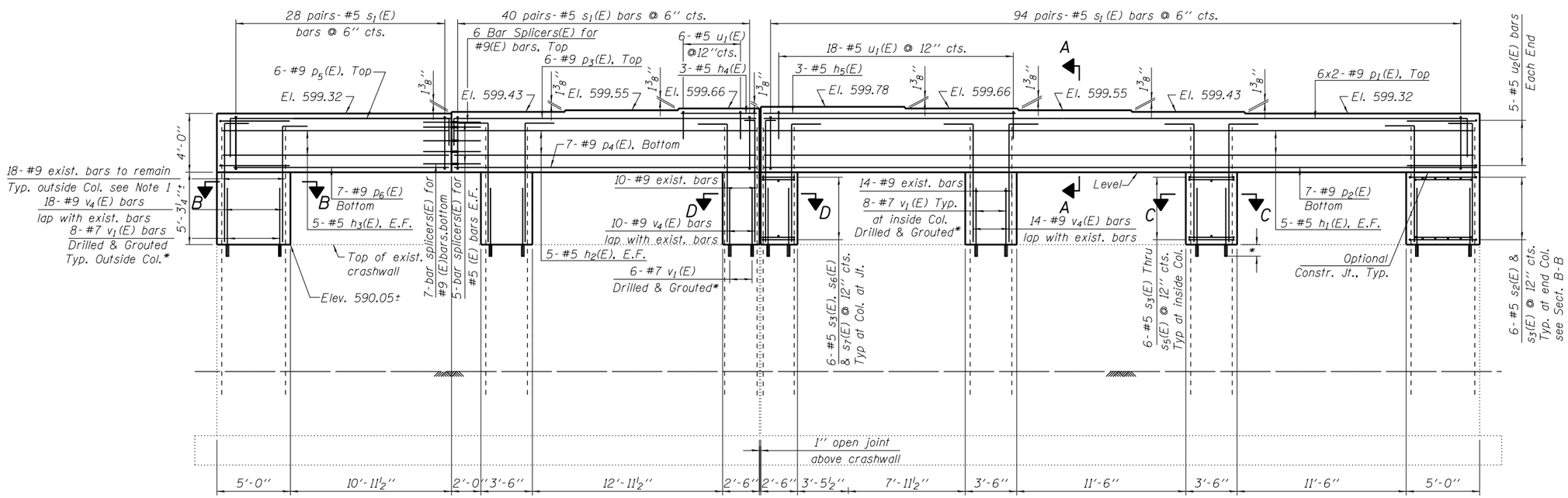

PIER 2 ELEVATION

(Looking East)

NOTES

1. Clean and reuse 8'-7" length of existing #9 vertical column bars at all columns. Cost included with Concrete Removal.
2. *Epoxy grout v_1(E) bars in 13" (min.) drilled holes according to Article 584 of the Standard Specifications.
3. See Sheets S46 and S47 for sections and Bill of Material.
4. Space reinforcement in cap to miss anchor bolts.
5. Pour steps monolithically with cap.

H:\Jobs20in\20in3022\CAD\Structural\dgn\016-1149_Final\00\D160J15-s41-pier-2.dgn
5/20/2013 11:24:15 AM

GRAEF
8501 W. Higgins Road; Suite 280
Chicago, Illinois 60631; (773) 399-0112

USER NAME =	DESIGNED - J.Z.	REVISED -	
	CHECKED - J.A.Z.	REVISED -	
PLOT SCALE =	DRAWN - E.E.J.	REVISED -	
PLOT DATE =	DATE - 5/17/2013	REVISED -	

STATE OF ILLINOIS
DEPARTMENT OF TRANSPORTATION

PIER 2 PLAN & ELEVATION
STRUCTURE NO. 016-1149

SHEET NO. S41 OF 50 SHEETS

F.A.I. RTE.	SECTION	COUNTY	TOTAL SHEETS	SHEET NO.
94	1920-B	COOK	137	100

CONTRACT NO. 60J15

ILLINOIS FED. AID PROJECT

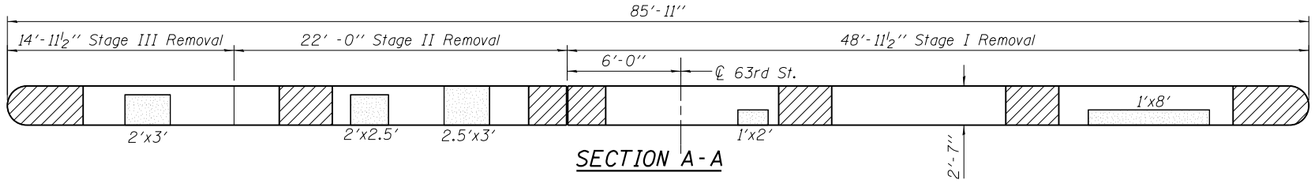

SECTION A-A

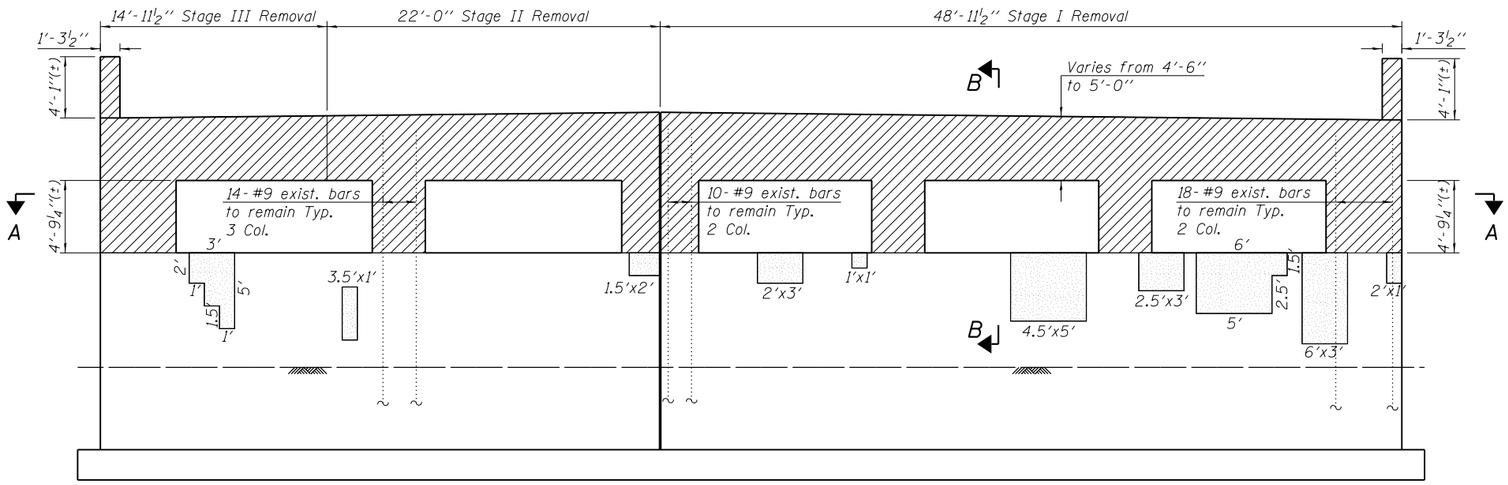

PIER 3 ELEVATION

(Looking East)

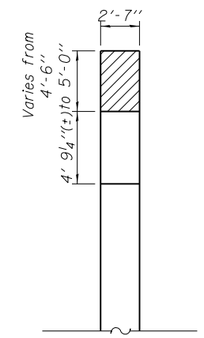

SECTION B-B

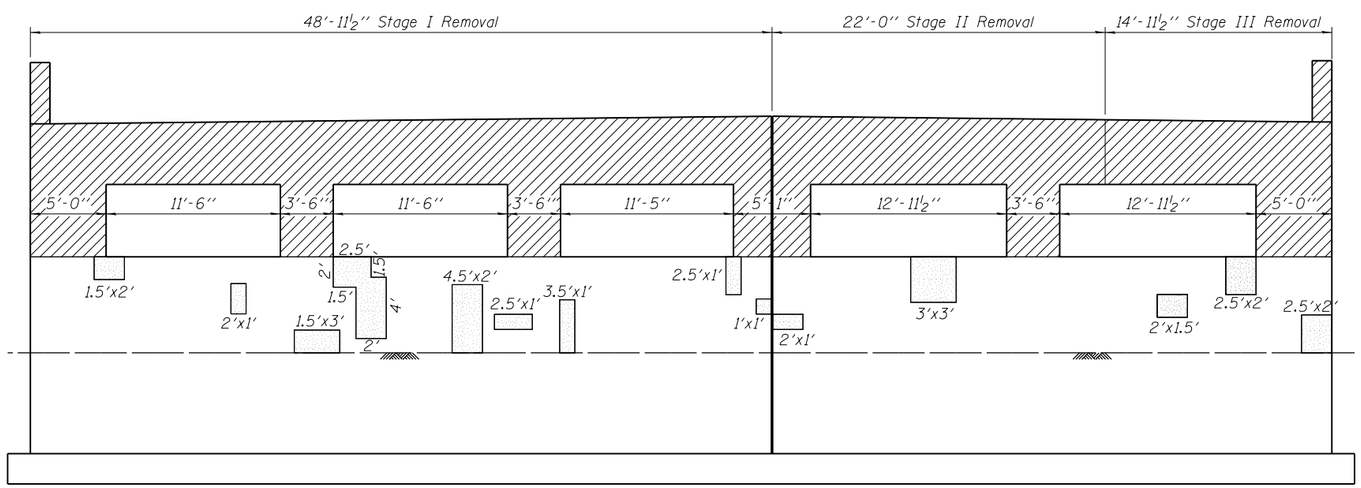

PIER 3 ELEVATION

(Looking West)

BILL OF MATERIAL

Item	Unit	Quantity
Concrete Removal	cu. yd.	47
Structural Repair of Concrete (Depth Equal to or Less than 5")	sq. ft.	189

LEGEND

Concrete Removal

Structural Repair of Concrete (Depth Equal to or Less than 5")

NOTES

1. Clean and reuse 8'-7'' length of existing #9 vertical column bars at all columns. Cost included with Concrete Removal.

H:\Jobs2011\2011302\CAD\Structural\dgn\016-1149_Final\00\D160J15-s42-pier3-rep.dgn
5/20/2013 11:24:16 AM

GRAEF
8501 W. Higgins Road; Suite 280
Chicago, Illinois 60631; (773) 399-0112

USER NAME =	DESIGNED - J.Z.	REVISED -
	CHECKED - J.A.Z.	REVISED -
PLOT SCALE =	DRAWN - E.E.J.	REVISED -
PLOT DATE =	DATE - 5/17/2013	REVISED -

STATE OF ILLINOIS
DEPARTMENT OF TRANSPORTATION

PIER 3 REMOVAL & REPAIR
STRUCTURE NO. 016-1149

SHEET NO. S42 OF 50 SHEETS

F.A.I. RTE.	SECTION	COUNTY	TOTAL SHEETS	SHEET NO.
94	1920-B	COOK	137	101

CONTRACT NO. 60J15

ILLINOIS FED. AID PROJECT

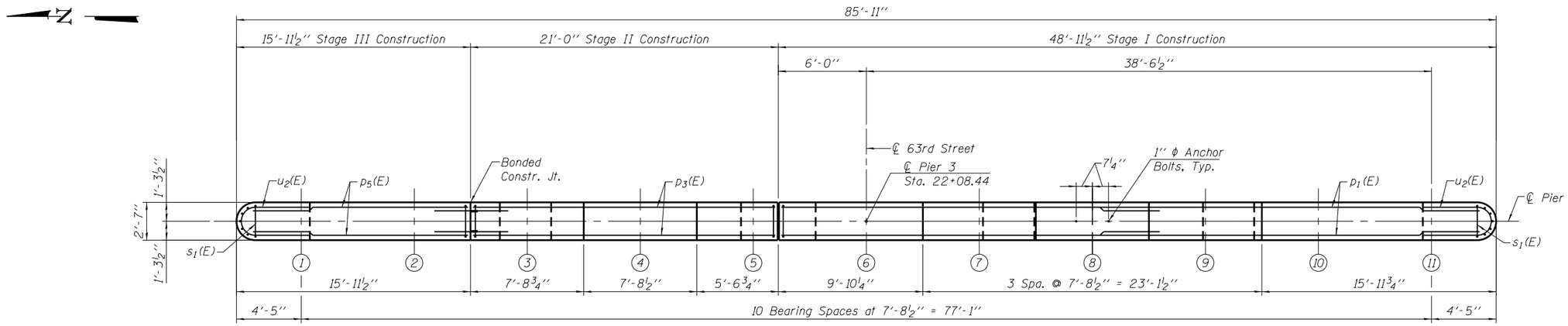

TOP PLAN

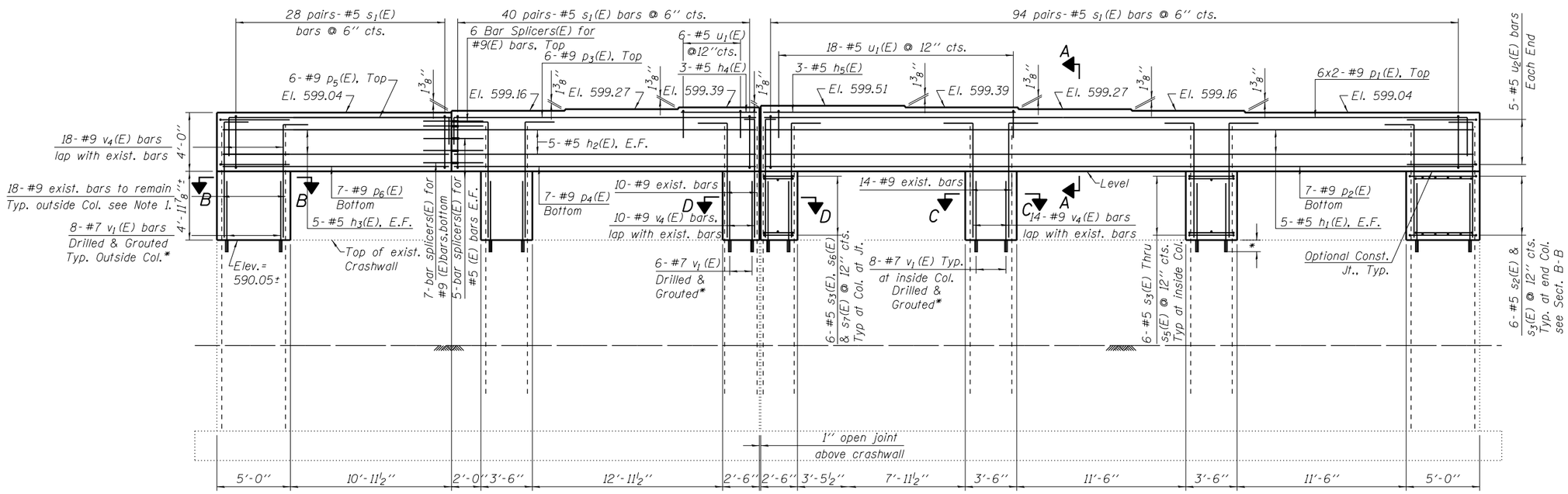

PIER 3 ELEVATION

(Looking East)

NOTES

1. Clean and reuse 8'-7" length of existing #9 vertical column bars at all columns. Cost included with Concrete Removal.
2. *Epoxy grout v_1(E) bars in 13" (min.) drilled holes according to Article 584 of the Standard Specifications.
3. See Sheets S46 and S47 for sections and Bill of Material.
4. Space reinforcement in cap to miss anchor bolts.
5. Pour steps monolithically with cap.

H:\Jobs2011\2013022\CAD\Structural\dgn\016-1149_Final\00\D160J15-s43-pier3.dgn
5/20/2013 11:24:16 AM

GRAEF
8501 W. Higgins Road; Suite 280
Chicago, Illinois 60631; (773) 399-0112

USER NAME =	DESIGNED - J.Z.	REVISED -	
	CHECKED - J.A.Z.	REVISED -	
PLOT SCALE =	DRAWN - E.E.J.	REVISED -	
PLOT DATE =	DATE - 5/17/2013	REVISED -	

STATE OF ILLINOIS
DEPARTMENT OF TRANSPORTATION

PIER 3 PLAN & ELEVATION
STRUCTURE NO. 016-1149
SHEET NO. S43 OF 50 SHEETS

F.A.I. RTE.	SECTION	COUNTY	TOTAL SHEETS	SHEET NO.
94	1920-B	COOK	137	102
		CONTRACT NO. 60J15		
		ILLINOIS FED. AID PROJECT		

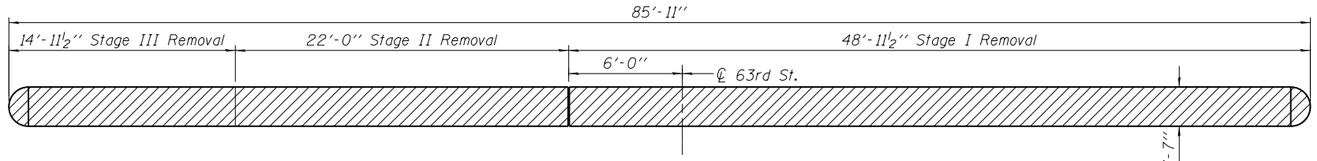

PIER 4 TOP PLAN

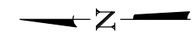

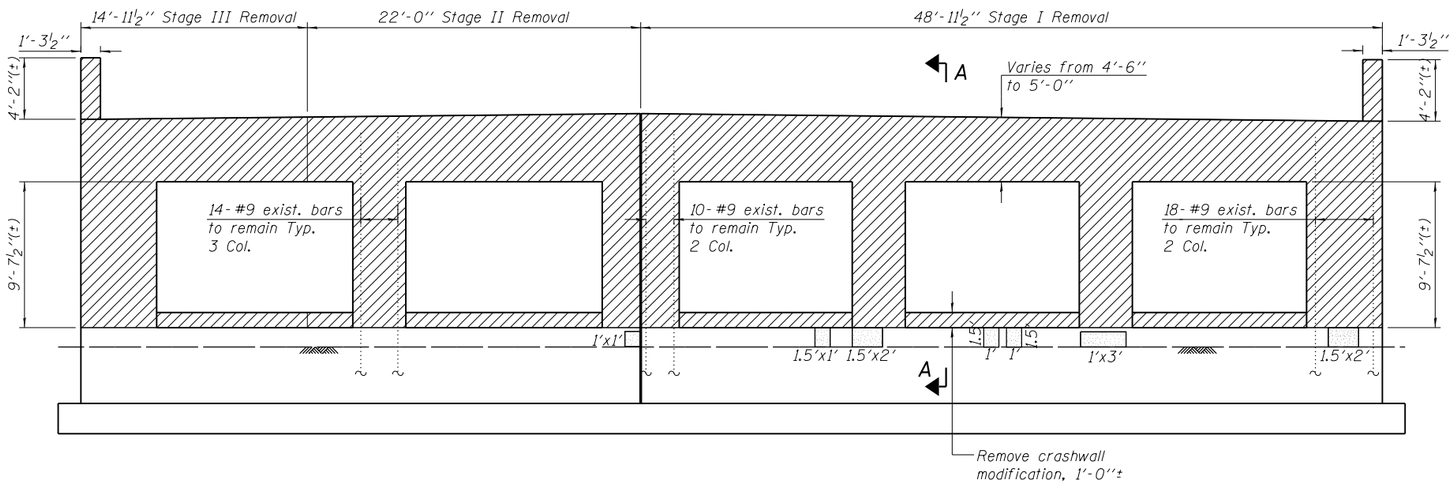

PIER 4 ELEVATION

(Looking East)

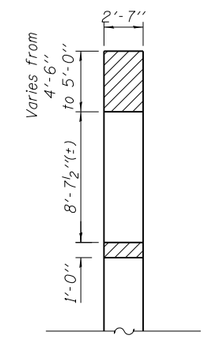

SECTION A-A

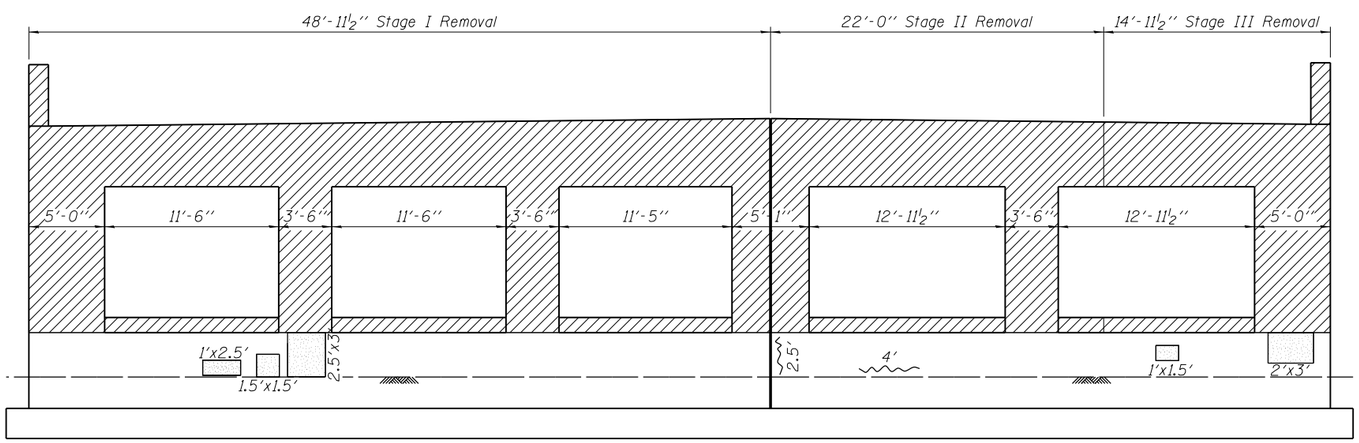

PIER 4 ELEVATION

(Looking West)

BILL OF MATERIAL

Item	Unit	Quantity
Concrete Removal	cu. yd.	63
Epoxy Crack Injection	ft.	7
Structural Repair of Concrete (Depth Equal to or Less than 5")	sq. ft.	34

LEGEND

Concrete Removal

Structural Repair of Concrete (Depth Equal to or Less than 5")

3' Epoxy Crack Injection

NOTES

1. Clean and reuse 8'-7" length of existing #9 vertical column bars at all columns. Cost included with Concrete Removal.

H:\Jobs2011\2011\3022\CAD\Structural\dgn\016-1149_Final\00\D160J15-s44-pier4-rep.dgn
5/20/2013 11:24:17 AM

GRAEF
8501 W. Higgins Road; Suite 280
Chicago, Illinois 60631; (773) 399-0112

USER NAME =	DESIGNED - J.Z.	REVISED -	
	CHECKED - J.A.Z.	REVISED -	
PLOT SCALE =	DRAWN - E.E.J.	REVISED -	
PLOT DATE =	DATE - 5/17/2013	REVISED -	

STATE OF ILLINOIS
DEPARTMENT OF TRANSPORTATION

PIER 4 REMOVAL & REPAIR
STRUCTURE NO. 016-1149

SHEET NO. S44 OF 50 SHEETS

F.A.I. RTE.	SECTION	COUNTY	TOTAL SHEETS	SHEET NO.
94	1920-B	COOK	137	103

CONTRACT NO. 60J15

ILLINOIS FED. AID PROJECT

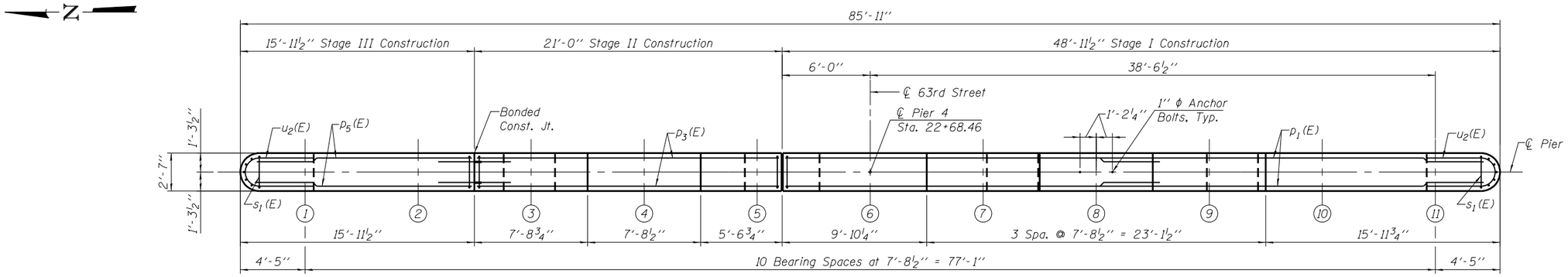

PIER 4 TOP PLAN

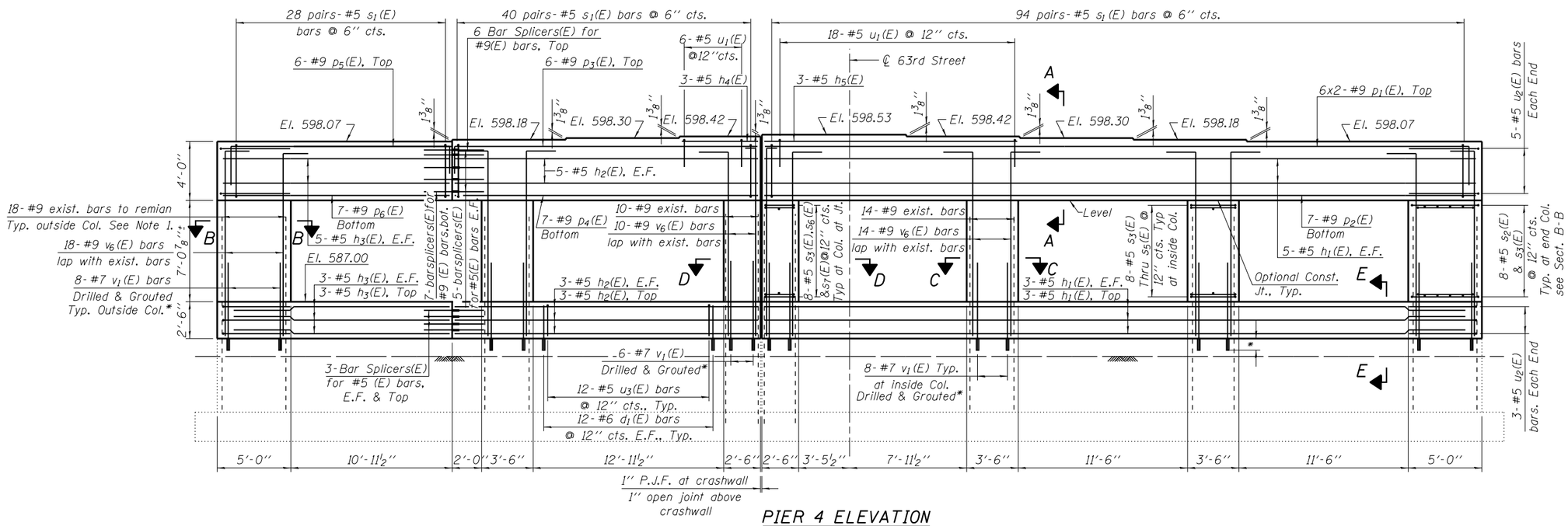

PIER 4 ELEVATION

(Looking East)

NOTES

1. Clean and reuse 8'-7" length of existing #9 vertical column bars at all columns. Cost included with Concrete Removal.
2. *Epoxy grout v_1(E) bars in 13" (min.) drilled holes according to Article 584 of the Standard Specifications.
3. See Sheets S46 and S47 for sections and Bill of Material.
4. Space reinforcement in cap to miss anchor bolts.
5. Pour steps monolithically with cap.

GRāEF
8501 W. Higgins Road; Suite 280
Chicago, Illinois 60631; (773) 399-0112

USER NAME =	DESIGNED - J.Z.	REVISED -	
	CHECKED - J.A.Z.	REVISED -	
PLOT SCALE =	DRAWN - E.E.J.	REVISED -	
PLOT DATE =	DATE - 5/17/2013	REVISED -	

STATE OF ILLINOIS
DEPARTMENT OF TRANSPORTATION

PIER 4 PLAN & ELEVATION
STRUCTURE NO. 016-1149

SHEET NO. S45 OF 50 SHEETS

F.A.I. RTE.	SECTION	COUNTY	TOTAL SHEETS	SHEET NO.
94	1920-B	COOK	137	104

CONTRACT NO. 60J15

ILLINOIS FED. AID PROJECT

H:\Jobs20I\20I3022\CAD\Structural\dgn\016-1149_Final\00\D160J15-s45-pier4.dgn
5/20/2013 11:24:17 AM

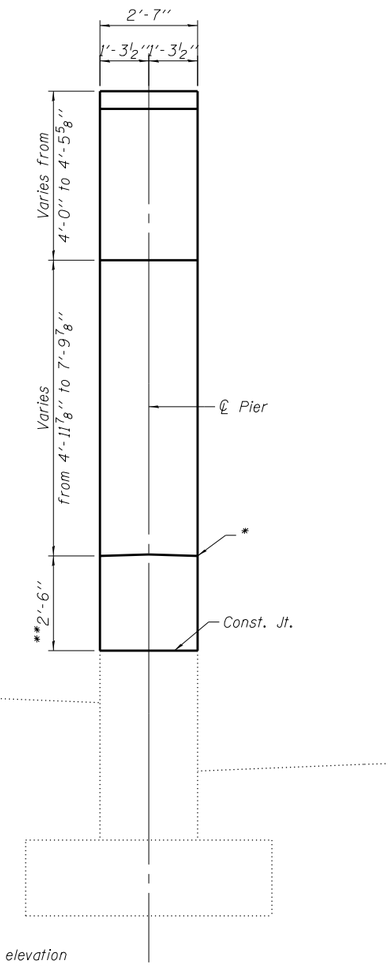

* The Location of the elevation at the top of crashwall shown in the Pier Elevation view.

**For Piers 1 & 4 only.

END VIEW

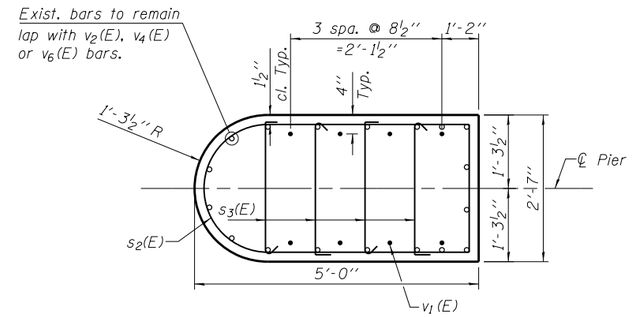

SECTION B-B

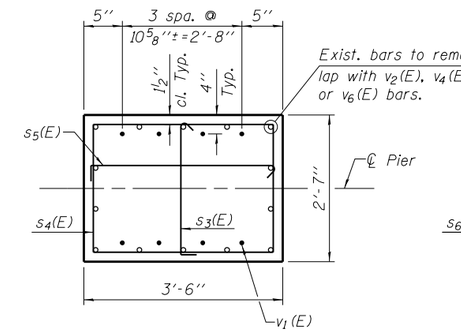

SECTION C-C

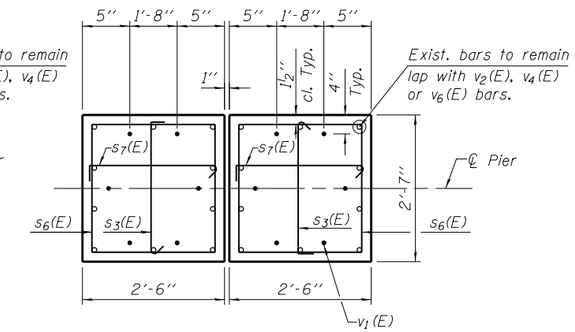

SECTION D-D

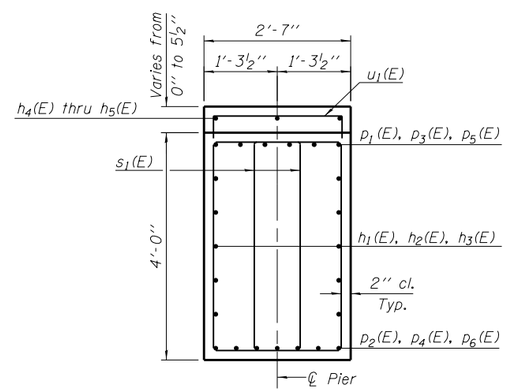

SECTION A-A

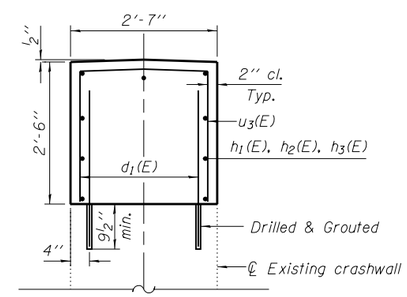

SECTION E-E

H:\Jobs2011\2013022\CAD\Structural\dgn\016-1149_Final\00\D160J15-s46-pier-dt.dgn
5/20/2013 11:24:18 AM

GRAEF 8501 W. Higgins Road; Suite 280 Chicago, Illinois 60631; (773) 399-0112	USER NAME =	DESIGNED - J.Z.	REVISED -	STATE OF ILLINOIS DEPARTMENT OF TRANSPORTATION	PIER DETAILS STRUCTURE NO. 016-1149	F.A.I. RTE.	SECTION	COUNTY	TOTAL SHEETS	SHEET NO.
		CHECKED - J.A.Z.	REVISED -			94	1920-B	COOK	137	105
	PLOT SCALE =	DRAWN - E.E.J.	REVISED -					CONTRACT NO. 60J15		
	PLOT DATE =	DATE - 5/17/2013	REVISED -		SHEET NO. S46 OF 50 SHEETS		ILLINOIS	FED. AID PROJECT		

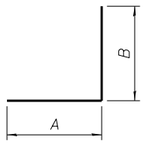

A & B DIMENSIONS

Bar	A	B
p_1(E)	29'-2"	1'-7"
v_2(E)	11'-6"	1'-7"
v_4(E)	8'-9"	1'-7"
v_6(E)	10'-10"	1'-7"

BARS p_1(E), v_2(E), v_4(E) & v_6(E)

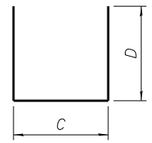

C & D DIMENSIONS

Bar	C	D
p_3(E)	20'-8"	1'-7"
p_5(E)	14'-5"	1'-7"
u_1(E)	2'-3"	1'-11"
u_3(E)	2'-3"	2'-3"

BARS p_3(E), p_5(E), u_1(E) & u_3(E)

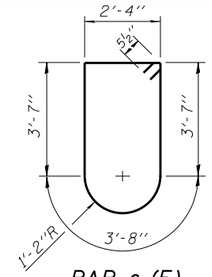

BAR s_2(E)

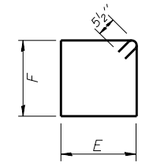

E & F DIMENSIONS

Bar	E	F
s_1(E)	1'-6"	3'-8"
s_4(E)	3'-3"	2'-4"
s_6(E)	2'-3"	2'-4"

BARS s_1(E), s_4(E) & s_6(E)

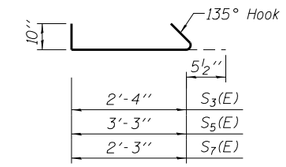

BARS S_3(E), S_5(E) & S_7(E)

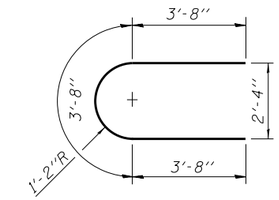

BAR u_2(E)

PIER 1
BILL OF MATERIAL

Bar	No.	Size	Length	Shape
d_1(E)	120	#6	3'-1"	——
h_1(E)	19	#5	47'-4"	——
h_2(E)	19	#5	20'-8"	——
h_3(E)	19	#5	14'-5"	——
h_4(E)	3	#5	5'-2"	——
h_5(E)	3	#5	17'-3"	——
p_1(E)	12	#9	30'-9"	
p_2(E)	7	#9	47'-3"	——
p_3(E)	6	#9	23'-10"	
p_4(E)	7	#9	20'-8"	——
p_5(E)	6	#9	17'-7"	
p_6(E)	7	#9	14'-5"	——
s_1(E)	324	#5	11'-3"	
s_2(E)	16	#5	14'-1"	
s_3(E)	104	#5	3'-8"	
s_4(E)	24	#5	12'-1"	
s_5(E)	24	#5	4'-7"	
s_6(E)	16	#5	10'-1"	
s_7(E)	16	#5	3'-7"	
u_1(E)	24	#5	6'-1"	
u_2(E)	16	#5	11'-0"	
u_3(E)	60	#5	6'-9"	
v_1(E)	52	#7	6'-3"	——
v_2(E)	98	#9	13'-1"	
Concrete Structures			Cu. Yd.	71.8
Reinforcement Bars, Epoxy Coated			Pound	17,180
Concrete Sealer			Sq. Ft.	2,166

PIER 2
BILL OF MATERIAL

Bar	No.	Size	Length	Shape
h_1(E)	10	#5	47'-4"	——
h_2(E)	10	#5	20'-8"	——
h_3(E)	10	#5	14'-5"	——
h_4(E)	3	#5	5'-2"	——
h_5(E)	3	#5	17'-3"	——
p_1(E)	12	#9	30'-9"	
p_2(E)	7	#9	47'-3"	——
p_3(E)	6	#9	23'-10"	
p_4(E)	7	#9	20'-8"	——
p_5(E)	6	#9	17'-7"	
p_6(E)	7	#9	14'-5"	——
s_1(E)	324	#5	11'-3"	
s_2(E)	12	#5	14'-1"	
s_3(E)	78	#5	3'-8"	
s_4(E)	18	#5	12'-1"	
s_5(E)	18	#5	4'-7"	
s_6(E)	12	#5	10'-1"	
s_7(E)	12	#5	3'-7"	
u_1(E)	24	#5	6'-1"	
u_2(E)	10	#5	11'-0"	
v_1(E)	52	#7	6'-3"	——
v_4(E)	98	#9	10'-4"	
Concrete Structures			Cu. Yd.	45.9
Reinforcement Bars, Epoxy Coated			Pound	14,130
Concrete Sealer			Sq. Ft.	1,371

PIER 3
BILL OF MATERIAL

Bar	No.	Size	Length	Shape
h_1(E)	10	#5	47'-4"	——
h_2(E)	10	#5	20'-8"	——
h_3(E)	10	#5	14'-5"	——
h_4(E)	3	#5	5'-2"	——
h_5(E)	3	#5	17'-3"	——
p_1(E)	12	#9	30'-9"	
p_2(E)	7	#9	47'-3"	——
p_3(E)	6	#9	23'-10"	
p_4(E)	7	#9	20'-8"	——
p_5(E)	6	#9	17'-7"	
p_6(E)	7	#9	14'-5"	——
s_1(E)	324	#5	11'-3"	
s_2(E)	12	#5	14'-1"	
s_3(E)	78	#5	3'-8"	
s_4(E)	18	#5	12'-1"	
s_5(E)	18	#5	4'-7"	
s_6(E)	12	#5	10'-1"	
s_7(E)	12	#5	3'-7"	
u_1(E)	24	#5	6'-1"	
u_2(E)	10	#5	11'-0"	
v_1(E)	52	#7	6'-3"	——
v_4(E)	98	#9	10'-4"	
Concrete Structures			Cu. Yd.	45.3
Reinforcement Bars, Epoxy Coated			Pound	14,130
Concrete Sealer			Sq. Ft.	1,348

PIER 4
BILL OF MATERIAL

Bar	No.	Size	Length	Shape
d_1(E)	120	#6	3'-1"	——
h_1(E)	19	#5	47'-4"	——
h_2(E)	19	#5	20'-8"	——
h_3(E)	19	#5	14'-5"	——
h_4(E)	3	#5	5'-2"	——
h_5(E)	3	#5	17'-3"	——
p_1(E)	12	#9	30'-9"	
p_2(E)	7	#9	47'-3"	——
p_3(E)	6	#9	23'-10"	
p_4(E)	7	#9	20'-8"	——
p_5(E)	6	#9	17'-7"	
p_6(E)	7	#9	14'-5"	——
s_1(E)	324	#5	11'-3"	
s_2(E)	16	#5	14'-1"	
s_3(E)	104	#5	3'-8"	
s_4(E)	24	#5	12'-1"	
s_5(E)	24	#5	4'-7"	
s_6(E)	16	#5	10'-1"	
s_7(E)	16	#5	3'-7"	
u_1(E)	24	#5	6'-1"	
u_2(E)	16	#5	11'-0"	
u_3(E)	60	#5	6'-9"	
v_1(E)	52	#7	6'-3"	——
v_6(E)	98	#9	12'-5"	
Concrete Structures			Cu. Yd.	70.2
Reinforcement Bars, Epoxy Coated			Pound	16,960
Concrete Sealer			Sq. Ft.	2,112

H:\Jobs2011\2011J022\CAD\Structural\dgn\D16-1149_Final\00\D16JJ15-s47-pier-bom.dgn
5/20/2013 11:24:18 AM

GRAEF
8501 W. Higgins Road; Suite 280
Chicago, Illinois 60631; (773) 399-0112

USER NAME =	DESIGNED - J.Z.	REVISED -	
	CHECKED - J.A.Z.	REVISED -	
PLOT SCALE =	DRAWN - E.E.J.	REVISED -	
PLOT DATE =	DATE - 5/17/2013	REVISED -	

STATE OF ILLINOIS
DEPARTMENT OF TRANSPORTATION

PIER BILLS OF MATERIAL
STRUCTURE NO. 016-1149

SHEET NO. S47 OF 50 SHEETS

F.A.I. RTE.	SECTION	COUNTY	TOTAL SHEETS	SHEET NO.
94	1920-B	COOK	137	106

CONTRACT NO. 60J15

ILLINOIS FED. AID PROJECT

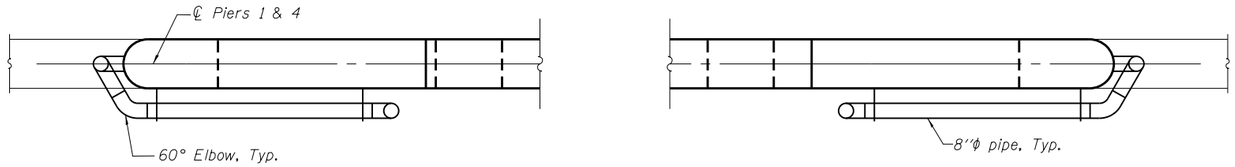

PARTIAL PIER PLAN VIEW

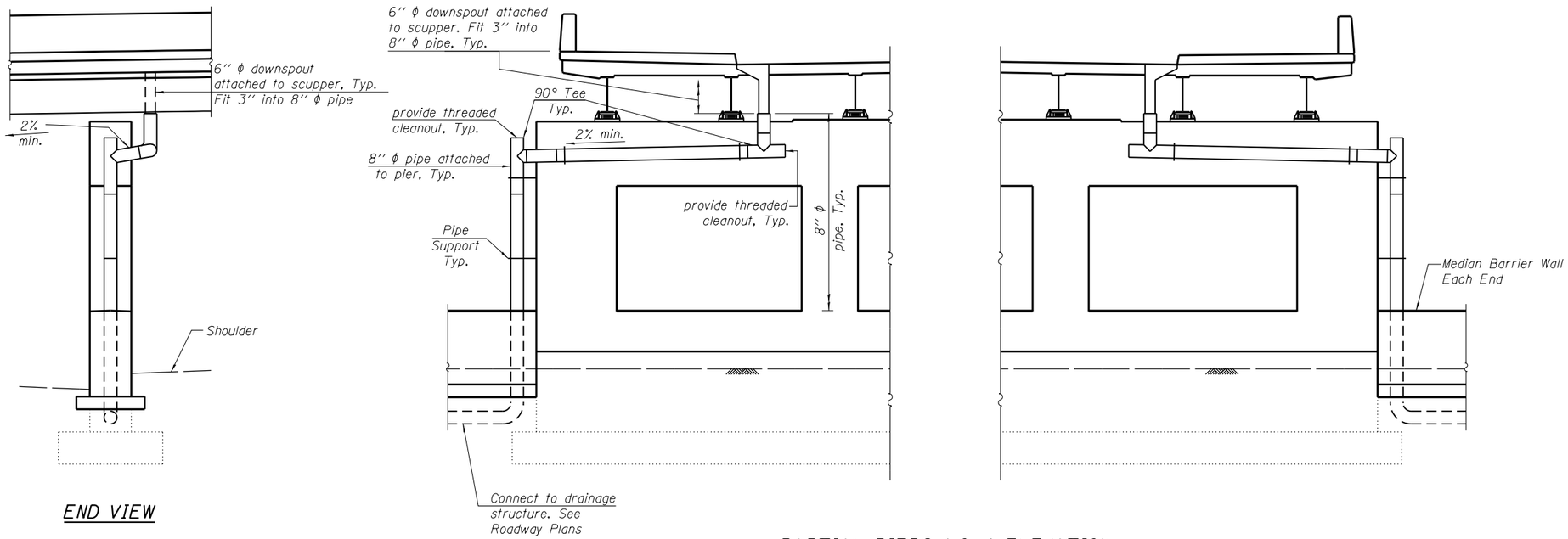

END VIEW

PARTIAL PIERS 1 & 4 ELEVATION

(Looking West)

BILL OF MATERIAL

Item	Unit	Total
Drainage System	L. Sum	1

NOTES

1. The pipe, fittings, pipe supports, inserts and bolts above the median barrier wall for the 4 locations shown are included in the pay item DRAINAGE SYSTEM.
The 6″ ϕ downspouts attached to scuppers are included with DRAINAGE SCUPPERS, DS-12.

H:\Jobs20li\20li3022\CAD\Structural\dgn\016-1149_Final\00\D160J15-s48-drainage.dgn
5/20/2013 11:24:19 AM

GRAEF
8501 W. Higgins Road; Suite 280
Chicago, Illinois 60631; (773) 399-0112

USER NAME =	DESIGNED - J.Z.	REVISED -	
	CHECKED - J.A.Z.	REVISED -	
PLOT SCALE =	DRAWN - E.E.J.	REVISED -	
PLOT DATE =	DATE - 5/17/2013	REVISED -	

STATE OF ILLINOIS
DEPARTMENT OF TRANSPORTATION

BRIDGE DRAINAGE SYSTEM
STRUCTURE NO. 016-1149

SHEET NO. S48 OF 50 SHEETS

F.A.I. RTE.	SECTION	COUNTY	TOTAL SHEETS	SHEET NO.
94	1920-B	COOK	137	107

CONTRACT NO. 60J15

ILLINOIS FED. AID PROJECT

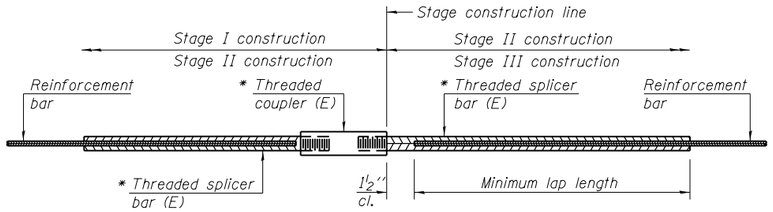

STANDARD BAR SPLICER ASSEMBLY

Minimum Lap Lengths						
Bar size to be spliced	Table 1	Table 2	Table 3	Table 4	Table 5	Table 6
3, 4	1'-5"	1'-11"	2'-1"	2'-4"	2'-7"	2'-11"
5	1'-9"	2'-5"	2'-7"	2'-11"	3'-3"	3'-8"
6	2'-1"	2'-11"	3'-1"	3'-6"	3'-10"	4'-5"
7	2'-9"	3'-10"	4'-2"	4'-8"	5'-2"	5'-10"
8	3'-8"	5'-1"	5'-5"	6'-2"	6'-9"	7'-8"
9	4'-7"	6'-5"	6'-10"	7'-9"	8'-7"	9'-8"

Table 1: Black bar, 0.8 Class C
Table 2: Black bar, Top bar lap, 0.8 Class C
Table 3: Epoxy bar, 0.8 Class C
Table 4: Epoxy bar, Top bar lap, 0.8 Class C
Table 5: Epoxy bar, Class C
Table 6: Epoxy bar, Top bar lap, Class C

Threaded splicer bar length = min. lap length + 1½" + thread length

* Epoxy not required on Bar Splicer Assembly components used in conjunction with black bars.

Location	Bar size	No. assemblies required	Table for minimum lap length
Deck	#5	2,152	5
Approach Slab	#4	100	6
Approach Slab	#5	344	5
West Abutment	#5	19	6
East Abutment	#5	19	6
Pier 1 Cap, Top	#9	6	6
Pier 1 Cap, Bottom	#9	7	5
Pier 1 Cap, Side	#5	10	6
Pier 1 Crashwall	#5	9	6
Pier 2 Cap, Top	#9	6	6
Pier 2 Cap, Bottom	#9	7	5
Pier 2 Cap, Side	#5	10	6
Pier 3 Cap, Top	#9	6	6
Pier 3 Cap, Bottom	#9	7	5
Pier 3 Cap, Side	#5	10	6
Pier 4 Cap, Top	#9	6	6
Pier 4 Cap, Bottom	#9	7	5
Pier 4 Cap, Side	#5	10	6
Pier 4 Crashwall	#5	9	6

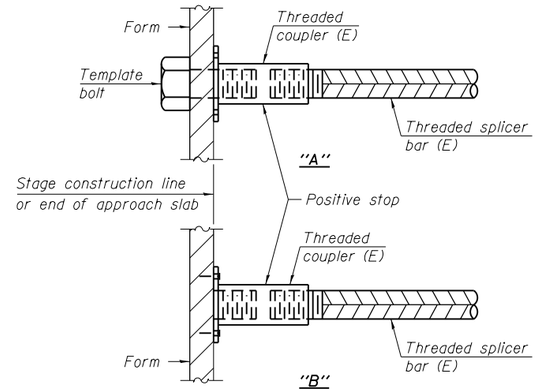

INSTALLATION AND SETTING METHODS

"A" : Set bar splicer assembly by means of a template bolt.
"B" : Set bar splicer assembly by nailing to wood forms or cementing to steel forms.
(E) : Indicates epoxy coating.

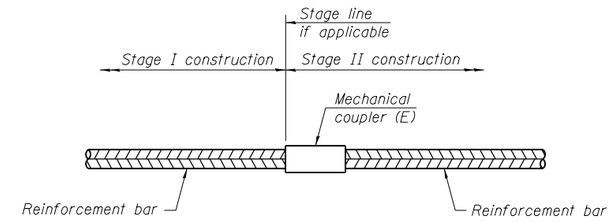

STANDARD MECHANICAL SPLICER

Location	Bar size	No. assemblies required

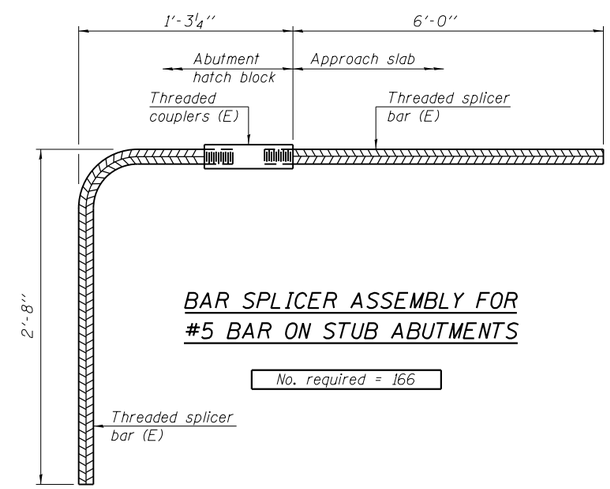

BAR SPLICER ASSEMBLY FOR #5 BAR ON STUB ABUTMENTS

No. required = 166

NOTES

Splicer bars shall be deformed with threaded ends and have a minimum 60 ksi yield strength.

All reinforcement shall be lapped and tied to the splicer bars.

Bar splicer assemblies shall be epoxy coated according to the requirements for reinforcement bars. See Section 508 of the Standard Specifications.

See approved list of bar splicer assemblies and mechanical splicers for alternatives.

BSD-1 8-31-12

H:\Jobs2011\2011302\CAD\Structural\dgn\016-1149_Final\00\D160J15-s49-bar-splcr-dt.dgn
5/20/2013 11:24:19 AM

GRAEF
8501 W. Higgins Road; Suite 280
Chicago, Illinois 60631; (773) 399-0112

USER NAME =	DESIGNED - J.Z.	REVISED -	
	CHECKED - J.A.Z.	REVISED -	
PLOT SCALE =	DRAWN - E.E.J.	REVISED -	
PLOT DATE =	DATE - 5/17/2013	REVISED -	

STATE OF ILLINOIS
DEPARTMENT OF TRANSPORTATION

BAR SPLICER ASSEMBLY DETAILS
STRUCTURE NO. 016-1149
SHEET NO. S49 OF 50 SHEETS

F.A.I. RTE.	SECTION	COUNTY	TOTAL SHEETS	SHEET NO.
94	1920-B	COOK	137	108
		CONTRACT NO. 60J15		
		ILLINOIS FED. AID PROJECT		

When cantilever forming brackets are used, the work shall be done according to Article 503.06(b) of the Standard Specifications, except as modified below and in the details shown on this sheet.

The finishing machine rails shall be placed on the top flange of the exterior beams.

The beams or girders, supporting cantilever forming brackets, shall be tied together at 4 foot intervals.

For Standard construction, or Stage Construction the Hardwood bracing materials shall be placed as shown between webs of beams in each bay.

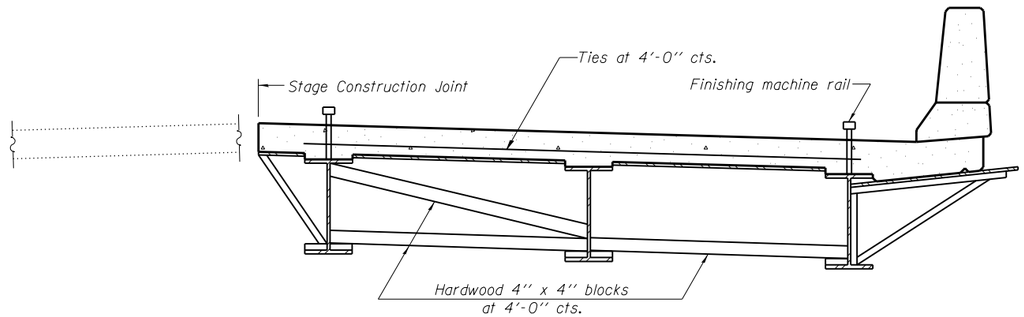

FORM BRACES FOR
STAGE CONSTRUCTION

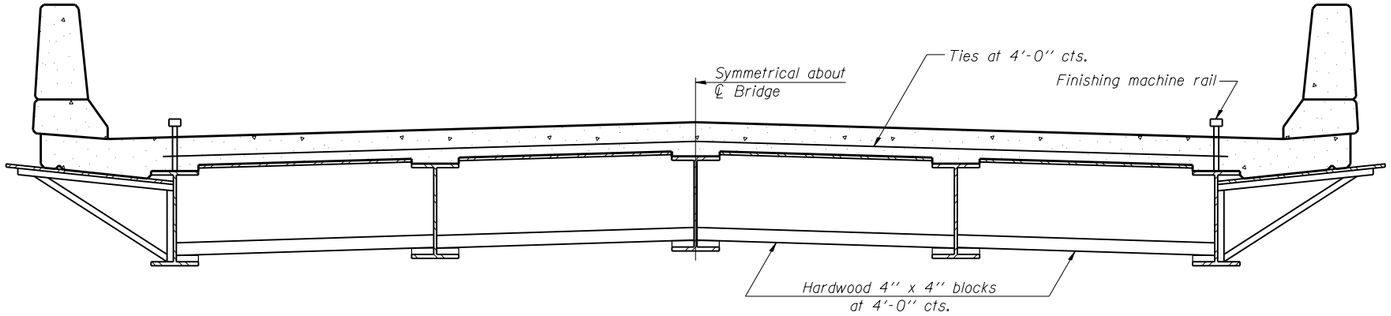

FORM BRACES FOR
STANDARD CONSTRUCTION

SB-1

7-1-10

GRAEF
8501 W. Higgins Road; Suite 280
Chicago, Illinois 60631; (773) 399-0112

USER NAME =	DESIGNED - J.Z.	REVISED -	
	CHECKED - J.A.Z.	REVISED -	
PLOT SCALE =	DRAWN - E.E.J.	REVISED -	
PLOT DATE =	DATE - 5/17/2013	REVISED -	

STATE OF ILLINOIS
DEPARTMENT OF TRANSPORTATION

CANTILEVER FORMING BRACKETS FOR SUPERSTRUCTURE
STRUCTURE NO. 016-1149

SHEET NO. S50 OF 50 SHEETS

F.A.I. RTE.	SECTION	COUNTY	TOTAL SHEETS	SHEET NO.
94	1920-B	COOK	137	109

CONTRACT NO. 60J15

ILLINOIS FED. AID PROJECT

H:\Jobs2011\20113022\CAD\Structural\dgn\016-1149_Final\00\D160J15-s50-cant.dgn
11:24:19 AM
5/20/2013